HDG

ENGINEERED PRODUCTS

STRUCTURAL DECK SUPPORT SYSTEM 2021 CATALOG

12'x16' BRICK OPEN DECK SAMPLE

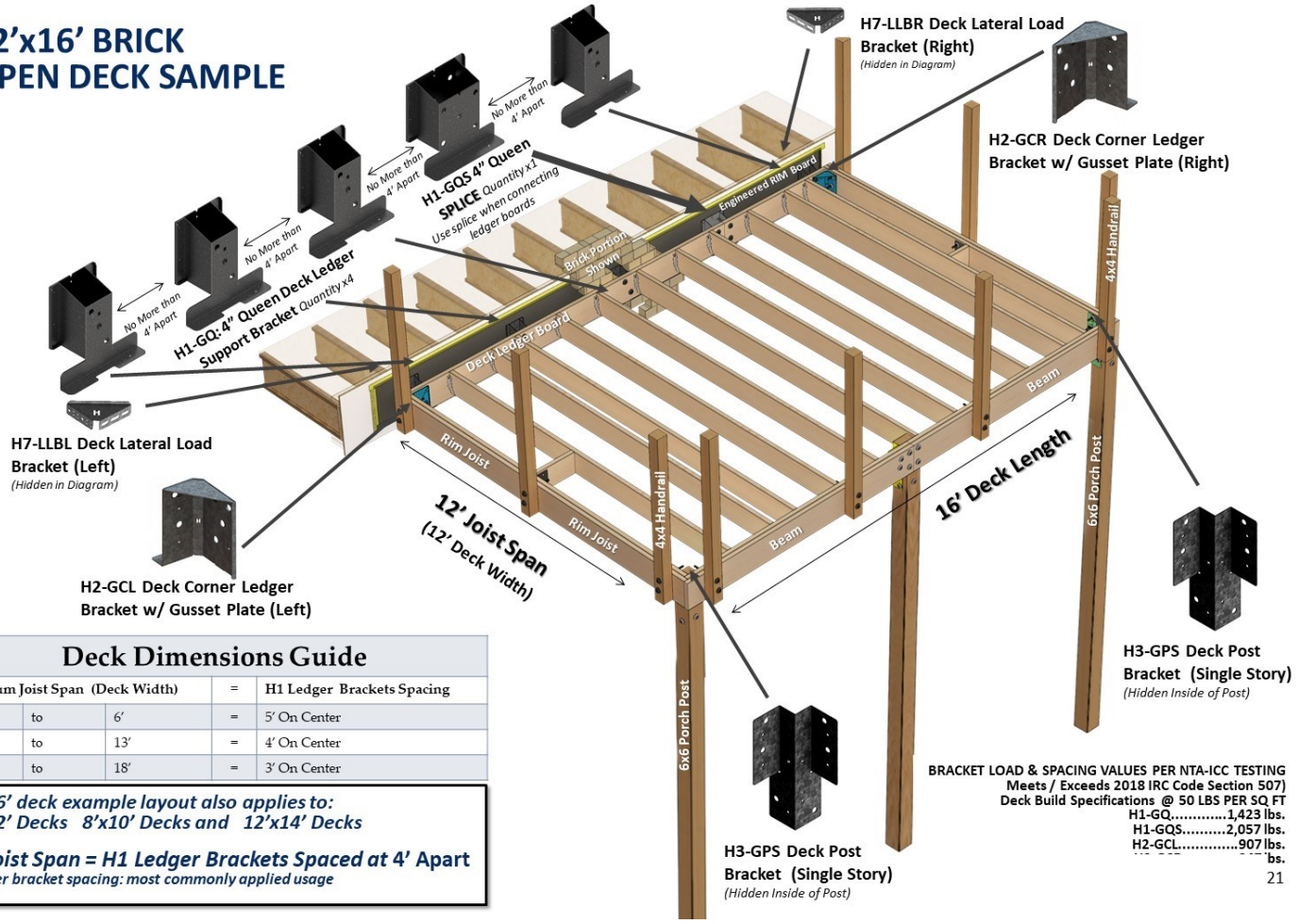

Deck Dimensions Guide				
Maximum Joist Span (Deck Width)			=	H1 Ledger Brackets Spacing
0'	to	6'	=	5' On Center
6'	to	13'	=	4' On Center
13'	to	18'	=	3' On Center

12'x16' deck example layout also applies to:
10'x12' Decks 8'x10' Decks and 12'x14' Decks

12' Joist Span = H1 Ledger Brackets Spaced at 4' Apart
4' ledger bracket spacing: most commonly applied usage

BRACKET LOAD & SPACING VALUES PER NTA-ICC TESTING
Meets / Exceeds 2018 IRC Code Section 507)
Deck Build Specifications @ 50 LBS PER SQ FT
H1-GQ.....1,423 lbs.
H1-GQS.....2,057 lbs.
H2-GCL.....907 lbs.

BUILT TO LAST. AMERICAN MADE.

This catalog contains general information, product descriptions, specifications, recommended assembly guides, field photos, order form, and retail price list.

Design Details

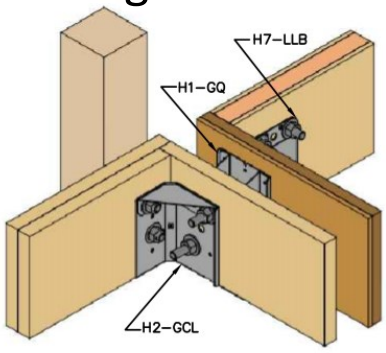

Assembly Guides

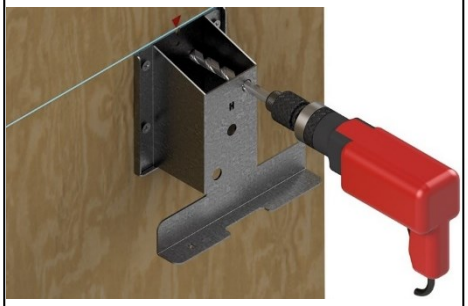

Field Photos

info@hdgep.com

HDG

ENGINEERED PRODUCTS

2021 CATALOG

SECTION 1 GENERAL INFORMATION OVERVIEW 1

ABOUT US 1
BUILDER LIST ..... **ERROR! BOOKMARK NOT DEFINED.**
STRUCTURAL DECK SUPPORT SYSTEM PRODUCT SPREAD 1
3-D DECK DIAGRAM 1
DESIGN DETAILS 1
FIELD POST PHOTO DEMONSTRATION 1
PRODUCT DESCRIPTION LIST WITH PRICE 1

SECTION 2 SERIES DESCRIPTIONS 1

H1 SERIES: DECK LEDGER SUPPORT BRACKETS 1
H2 SERIES: DECK CORNER BRACKETS 1
H3 SERIES: DECK POST BRACKETS 1
H4 SERIES: PORCH ROOF TO POST BRACKETS 1
H5 SERIES: BEAM TO POST BRACKETS 1
H6 SERIES: POST BASES 1
H7 SERIES: REINFORCEMENT BRACKETS 1

SECTION 3 ASSEMBLY GUIDES 1

HOUSEWRAP GUIDE 1
SERIES 1-2: QUEEN & CORNER BRACKETS ASSEMBLY GUIDE 1
SERIES 2: CORNER BEAM BRACKET ASSEMBLY GUIDE 1
SERIES 3: SINGLE STORY DECK POST BRACKET ASSEMBLY GUIDE 1
SERIES 3: MULTISTORY DECK POST BRACKET ASSEMBLY GUIDE 1
SERIES 4: PORCH ROOF TO POST BRACKET ASSEMBLY GUIDE 1
SERIES 5: BEAM TO POST BRACKET ASSEMBLY GUIDE 1
SERIES 5: KNEE BRACE BRACKET ASSEMBLY GUIDE 1
SERIES 6: POST BASE ASSEMBLY GUIDE 1
SERIES 7: REINFORCEMENT BRACKET ASSEMBLY GUIDE 1

SECTION 4 PHOTO GALLERY, ORDER FORM, & RETAIL PRICE LIST 1

FIELD INSTALLATION SERIES PHOTOS 1
FINAL FIELD PHOTOS GALLERY 1
RETAIL PRICE LIST 1
SAMPLE ORDER FORM 1
NTA-ICC CODE COMPLIANCE TESTING REPORT 1

USPTO Patent # 10,024,046 Copyright © 2018-2021 HDG, Inc. - All Rights Reserved - Terms of Use @www.hdgep.com
209 Tidwell Dr. Alpharetta, GA 30004 | (770) 777-7007 | info@hdgep.com

SECTION 1

SECTION 1 GENERAL INFORMATION OVERVIEW 2
ABOUT US 3
BUILDER LIST 4
STRUCTURAL DECK SUPPORT SYSTEM PRODUCT SPREAD 5
3-D DECK DIAGRAM 6
DESIGN DETAILS 7
FIELD POST PHOTO DEMONSTRATION 8
PRODUCT DESCRIPTION LIST WITH PRICE 9

USPTO Patent # 10,024,046 Copyright © 2018-2021 HDG, Inc. - All Rights Reserved - Terms of Use @www.hdgep.com
209 Tidwell Dr. Alpharetta, GA 30004 | (770) 777-7007 | info@hdgep.com

www.hdgep.com ***770.777.7007*** ***info@hdgep.com***

Engineered Deck Support System

Built to Last. American Made.

- **Exceeding code requirements, the unique system strengthens *and* reinforces wood deck and porch framing components**
  - Connects the outdoor living structure to the adjacent building's floor structure.
  - Reinforces the handrail post connection and is offered for multistory applications as well.
- **HDG brackets can also be applied for energy Foam/ Siding Deck Ledger Board attachment applications.**
  - Depending on the size and design of the deck, 2x4 knee bracing may be eliminated.
- **American Made: Designed, Engineered, and Fabricated in USA:**
  - CNC cut from 12 Gauge (approx. 0.1084") Steel Plate.
- **Steel Bracket Components Available in Multiple Coatings**
  - **Hot Dipped Galvanized –** Black Finish *or* Natural Finish Stainless Steel
  - **Custom Orders:** Polished Stainless Steel- Industrial Textured Finish

Certification and Codes

- Designed to meet and exceed current **ICC Building Code's Deck Requirements**
- USPTO (**United States Patent and Trademark Office)**
  - US Patent Number 10,024,046: Bracing Bracket System
- NADRA Charter Member: North American Deck & Railing Association (www.nadra.org)
- ICC-NTA Testing Report No.: HDGI102218-13
  - Download Full Report at: www.hdgep.com/ntareport

USPTO Patent # 10,024,046 Copyright © 2018-2021 HDG, Inc. - All Rights Reserved - Terms of Use @www.hdgep.com

209 Tidwell Drive
Alpharetta, GA 30004
(770) 777 - 7007
www.hdgep.com

Structural Deck Support System

H1 Series: Deck Ledger Support Brackets

4'' Queen [HI-GQ]

Queen 4" Splice [H1- GQS]

King 5" [H1-GK]

King 5" Splice [H1-GKS]

Coming Soon: 1", 2", 3" Variations of Ledger Support Brackets

H2 Series: Deck Corner Brackets

Corner Ledger Left & Right
w/ Gusset Plate [H2-GCL] [H2-GCR]

Corner Beam Bracket
[H2-GCB]

Deck Corner Hanger Bracket
Left & Right [H2-GCHL] [H2-GCHR]

Coming Soon: Stair Variations

H3 Series: Deck Post Brackets

Single [H3-GPS]

Multistory [H3-GPM]

H4 Series: Porch Roof/Post Brackets

For 2x Framing Porch/Roof/Post [H4-GPR]

Double LVL [H4-GPRV]

LVL Left & Right [H4-GPRL] [H4-GPRR]

H5 Series: Beam to Post Brackets

PSL 2" Left & Right
[H5-GBL3] [H5-GBR3]

Splice 2.5" Left & Right
[H5-GBL4] [H5-GBR4]

PSL MHD Bracket Left & Right
[H5-GBL5] [H5-GBR5]

Knee Brace Left & Right
[H5-GNL/GNR]

H6 Series: Post Bases

Post Base [H6-GB6]

Also available in 3, 5, 7 Variations of Post Bases

H7 Series: Reinforcement Brackets

Lateral Load Bracket
[H7-LLBL] [H7-LLBR]

Mini Triangle
[H7-GM]

Copyright © 2018-20 HDG, Inc. - USPTO No. 10,024,046 -
All Rights Reserved - Terms of Use Listed @ www.hdgep.com - Contact: info@hdgep.com

12’x16’ BRICK OPEN DECK SAMPLE

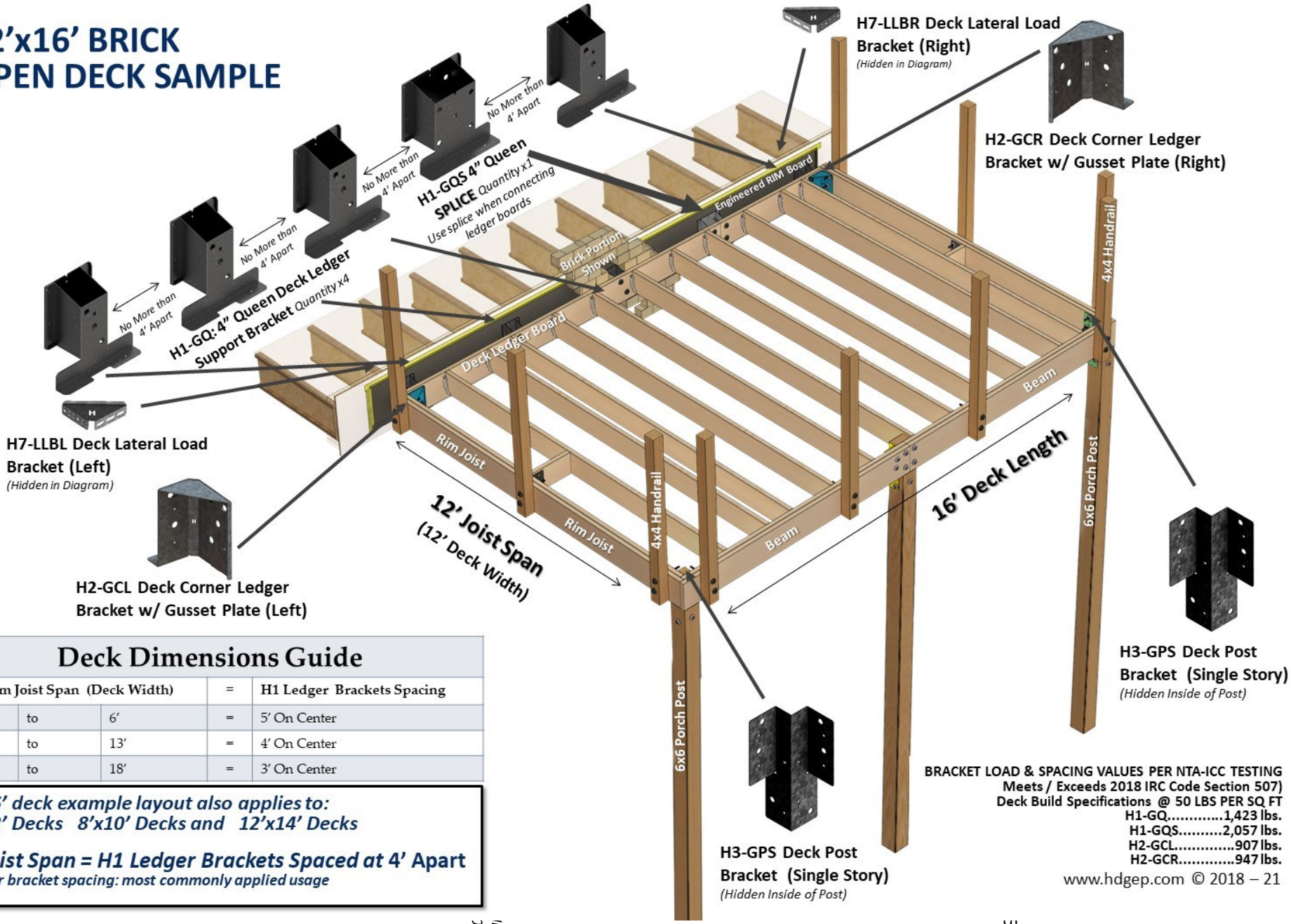

Deck Dimensions Guide

Maximum Joist Span (Deck Width)			=	H1 Ledger Brackets Spacing
0’	to	6’	=	5’ On Center
6’	to	13’	=	4’ On Center
13’	to	18’	=	3’ On Center

12’x16’ deck example layout also applies to:
10’x12’ Decks 8’x10’ Decks and 12’x14’ Decks

12’ Joist Span = H1 Ledger Brackets Spaced at 4’ Apart
4’ ledger bracket spacing: most commonly applied usage

BRACKET LOAD & SPACING VALUES PER NTA-ICC TESTING
Meets / Exceeds 2018 IRC Code Section 507)
Deck Build Specifications @ 50 LBS PER SQ FT
H1-GQ.....1,423 lbs.
H1-GQS.....2,057 lbs.
H2-GCL.....907 lbs.
H2-GCR.....947 lbs.

www.hdgep.com © 2018 – 21

DG, Inc. - All Right
004 | (770) 777-7

HDG
ENGINEERED PRODUCTS

DESIGN DETAILS

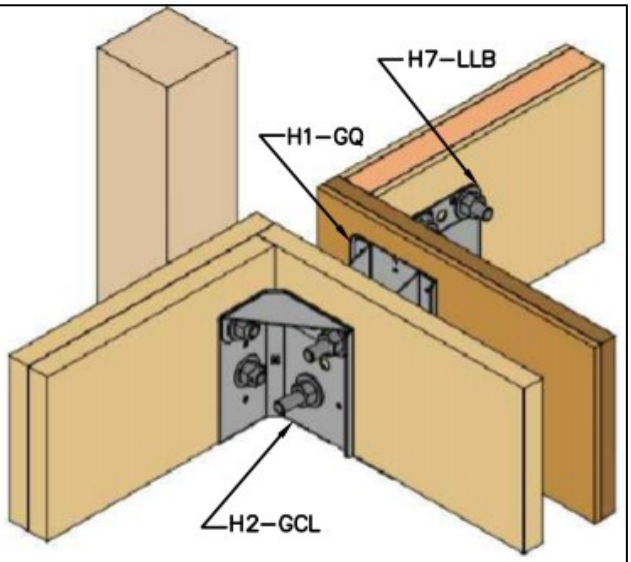

Inside Deck Ledger to Corner View
H2-GCL Corner Bracket Connected to H1-GQ Queen on Deck Ledger and H7-LLB Opposing for Reinforcement

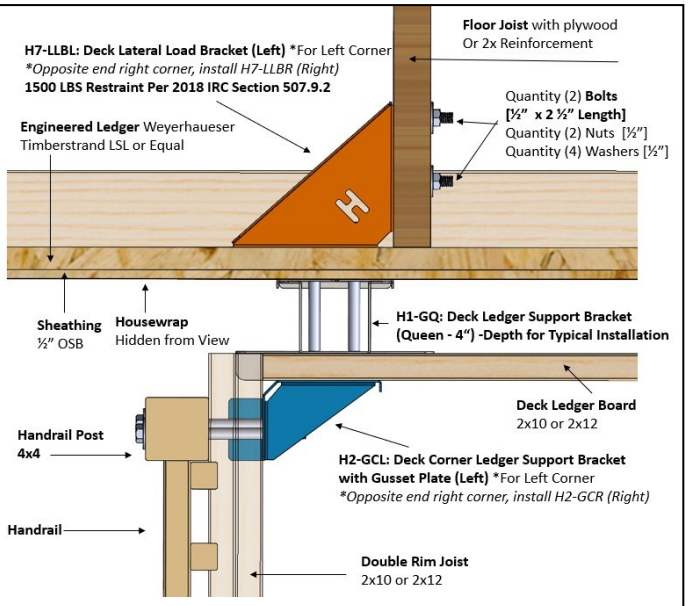

Deck Corner Restraint Assembly: Top View
View Focusing on the H7-LLB

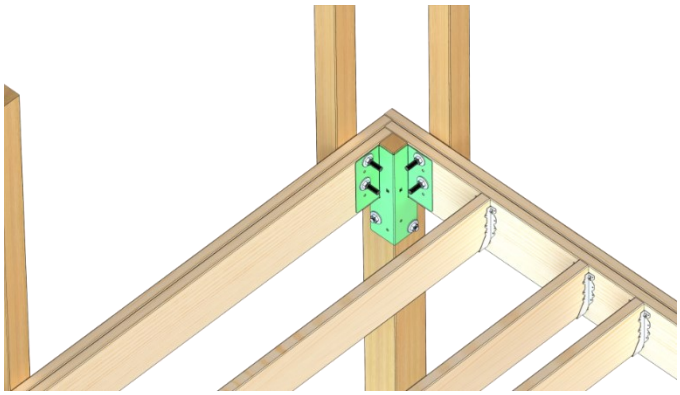

Uncovered Deck with Single Story Post
H3-GPS Close-up Transparent View
Below Deck @ Outside Post

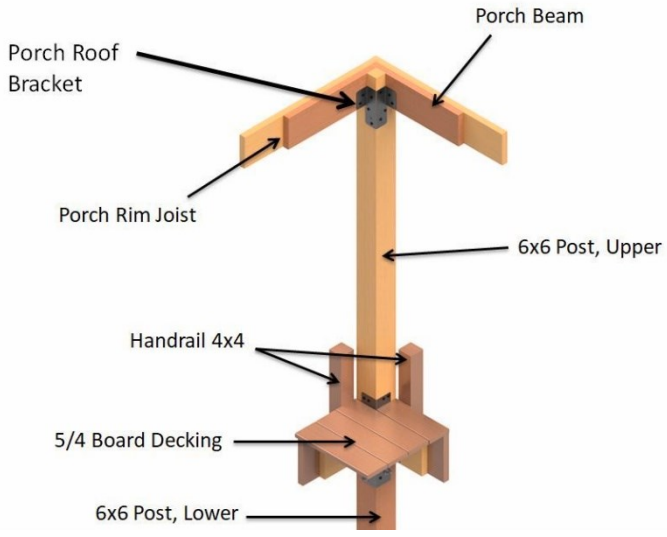

Covered Deck with Multistory Post
H3-GPM View with H4-GPR above
Inside View of Deck @ Outside Post

USPTO Patent # 10,024,046 Copyright © 2018-2021 HDG, Inc. - All Rights Reserved - Terms of Use @www.hdgep.com
209 Tidwell Dr. Alpharetta, GA 30004 | (770) 777-7007 | info@hdgep.com

DECK BUILT WITHOUT BRACKET SUPPORTS

DECK BUILT WITH BRACKET SUPPORTS

H3-GPS SINGLE STORY DECK POST BRACKET

USPTO Patent # 10,024,046 Copyright © 2018-2021 HDG, Inc. - All Rights Reserved - Terms of Use @www.hdgep.com
209 Tidwell Dr. Alpharetta, GA 30004 | (770) 777-7007 | info@hdgep.com

209 Tidwell Drive Alpharetta, Georgia 30004 www.hdgep.com Office 770-777-7007 ~ ext. 234

08/07/20

Description List

HDG ENGINEERED PRODUCTS

Series	Model	Bracket Type	Picture	Description
DECK LEDGER SUPPORT BRACKETS				
H1 Series	GQ	**Queen** Deck Ledger Support Bracket (4")		**ALL Deck Ledger Support Brackets:** • For supporting a deck ledger adjacent to masonry veneer • Each bracket supports over 1,390 Lbs • Open design equals simple inspection • Available in 4" depth, 5" depth, and splice variations
	GQS	**Queen Splice** Deck Ledger Support Bracket (4")		
	GK	**King** Deck Ledger Support Bracket (5")		
	GKS	**King Splice** Deck Ledger Support Bracket (5")		
DECK CORNER BRACKETS				
H2 Series	GCL	Deck Corner Ledger Bracket **w/ Gusset Plate (Left)**		**ALL Deck Corner Brackets:** • Attaches to the deck ledger board • Eliminates 2x4 knee bracing • Reinforces and supports the outside rim joist **Standard Deck Corner Brackets:** • Reinforces 4x4 handrail post • Available in left, right configurations. • Available to fit standard gusset plates, **Deck Corner Beam Bracket:** • Reinforces the external or internal outside rim joist and 4x4 handrail post
	GCR	Deck Corner Ledger Bracket **w/ Gusset Plate (Right)**		
	GCB	Deck Corner Beam Bracket		
	GCHL	Deck Corner Hanger (Left)		
	GCHR	Deck Corner Hanger (Right)		
DECK POST BRACKETS				
H3 Series	GPS	**Deck Post Bracket (Single Story)**		**ALL Deck Post Brackets:** • Reinforces the deck at the exterior corner beam and outside rim joist, upon top of the 6x6 post, the integrity of the handrail 4x4 posts & eliminates 2x4 knee bracing • Variations for Single Story, or Multi-Story model which assists 6x6 Post stacking
	GPM	**Deck Post Bracket (Multi Story)**		
PORCH ROOF/ POST BRACKETS				
H4 Series	GPR	Porch Roof/Post Bracket **(For 2 x Framing Lumber)**		**ALL Porch Roof/Post Brackets:** • Made for covered decks • Attaches to the roof beam and deck post • Available for 2x Framing, Double LVL, and LVL Framing • **LVL Framing** • Available in left, right configurations
	GPRV	Porch Roof/Post Bracket **(Double LVL)**		
	GPRL	Porch Roof/Post Bracket **LVL (Left)**		
	GPRR	Porch Roof/Post Bracket **LVL (Right)**		
BEAM TO POST BRACKETS				
H5 Series	GBL3	**PSL** Beam to Post Bracket **2" (Left)**		**ALL Beam to Post Brackets:** • Connects & reinforces shaker (dropped) beam to post • Available in left, right configurations **Standard Beam to Post Brackets:** • Available in 2" PSL or 2-1/2" splice configurations **Knee Brace Brackets:** • Reinforces the joining of a 4x4 or 6x6 diagonal brace to a 6x6 post
	GBR3	**PSL-** Beam to Post Bracket **2" (Right)**		
	GBL4	Beam **Splice** Post Bracket **2-1/2" (Left)**		
	GBR4	Beam **Splice** Post Bracket **2-1/2" (Left)**		
	GBL5	PSL MHD (Left)		
	GBR5	PSL MHD (Right)		
	GNL	**Knee Brace** Bracket **(Left)**		
	GNR	**Knee Brace** Bracket **(Right)**		
POST BASES				
H6 Series	GB6	Post Base **6x6**		**ALL Post Bases:** • Post base designed to resists twisting and slipping • Anchors into concrete • Holds bottom of post 1" off concrete • Available in 4", 6", or 8" variation
REINFORCEMENT BRACKETS				
H7 Series	LLBL	Lateral Load Bracket (Left)		**ALL Reinforcement Brackets:** • Reinforces various deck construction features • **Deck Lateral Load Bracket:** Extra strength lateral deck retention to construction framing 1500 lbs • **Triangle:** Reinforces 4x4 to 2x4 using structural screws
	LLBR	Lateral Load Bracket (Right)		
	GM	Mini Reinforcement **Triangle Bracket**		

Copyright © 2018 HDG, Inc. - USPTO No. 10,024,046 - All Rights Reserved - Terms of Use Listed @ www.hdgep.com - Contact: info@hdgep.com

SECTION 2

Series Descriptions

USPTO Patent # 10,024,046 Copyright © 2018-2021 HDG, Inc. - All Rights Reserved - Terms of Use @www.hdgep.com
209 Tidwell Dr. Alpharetta, GA 30004 | (770) 777-7007 | info@hdgep.com

HDG
ENGINEERED PRODUCTS

H1 SERIES: DECK LEDGER SUPPORT

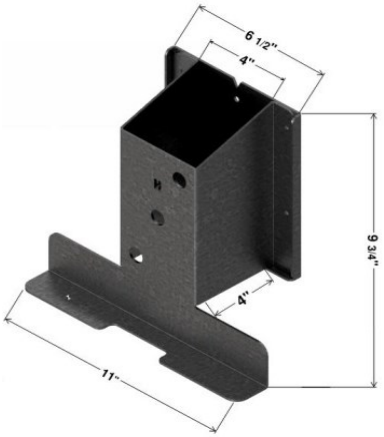

4” Queen

Queen Deck Ledger Support Bracket
(H1-GQ)

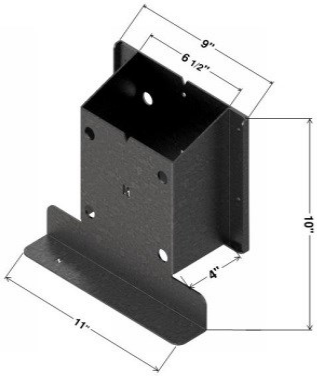

4” Queen Splice

Queen Splice Deck Ledger Support Bracket
(H1-GQS)

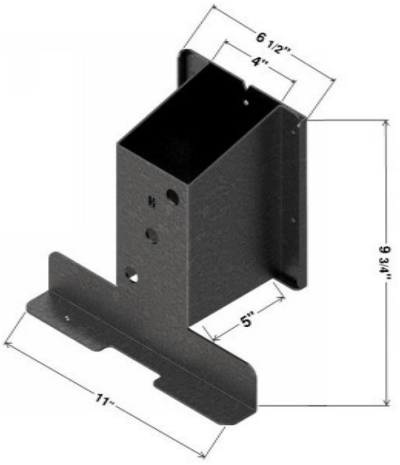

5” King

King Deck Ledger Support Bracket
(H1-GK)

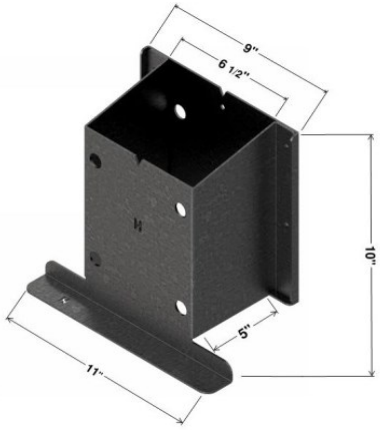

5” King Splice

King Splice Deck Ledger Support Bracket
(H1-GKS)

USPTO Patent # 10,024,046 Copyright © 2018-2021 HDG, Inc. - All Rights Reserved - Terms of Use @www.hdgep.com
209 Tidwell Dr. Alpharetta, GA 30004 | (770) 777-7007 | info@hdgep.com

HDG
ENGINEERED PRODUCTS

H1 SERIES: DECK LEDGER SUPPORT

Description

- The H1 Series Deck Ledger Support Brackets allow a deck ledger to be supported adjacent to masonry veneer without the need for additional posts at masonry wall. Each bracket supports over 1,390 lbs., has outside rim joist support, and superior water intrusion prevention. Its open design allows for easy inspection prior to masonry.
- Available for Queen, Modular brick, and Stone. Also available in Splice variations for the purpose of securely joining two deck ledger boards when one board isn't long enough to span your deck design.

Specifications

DETAILS	
Brand:	HDG, Inc.
Finish:	Hot Dipped Galvanized
	(Black Industrial Coating)
Thickness:	12 Gauge Steel -
	Supports over 1,390 lbs./bracket
Rated:	For Treated Lumber
Supports:	Deck Ledger Board Sizes 2x10 and 2x12
USPTO:	Bracket Bracing System -
	Patent Number US 10,024,046
Warranty	Limited (1) Year Manufacturer Warranty

DIMENSIONS		
Queen	*Length (L)*	11"
	Width (W)	6½" (Standard)
		9" (Splice)
	Height (H)	9 ¾"
	Depth (from Wall)	4"
King	*Length (L)*	11"
	Width (W)	6 ½" (Standard)
		9" (Splice)
	Height (H)	10"
	Depth (from Wall)	5"

General Construction Notes

- **Check For Additional Requirements Per**
  - **Deck design professional AND local code authority**
- ***INSTALLER IS RESPONSIBLE FOR PREVENTING WATER INTRUSION:**
  - Tighten all bolts and caulks
- **Fasteners are t**o be installed ONLY in provided, specified holes and **to meet or exceed local code.**
- **Additional sizes available in 1", 2" and 3" variations.**

USPTO Patent # 10,024,046 Copyright © 2018-2021 HDG, Inc. - All Rights Reserved - Terms of Use @www.hdgep.com
209 Tidwell Dr. Alpharetta, GA 30004 | (770) 777-7007 | info@hdgep.com

HDG
ENGINEERED PRODUCTS

H2 SERIES: DECK CORNER BRACKETS

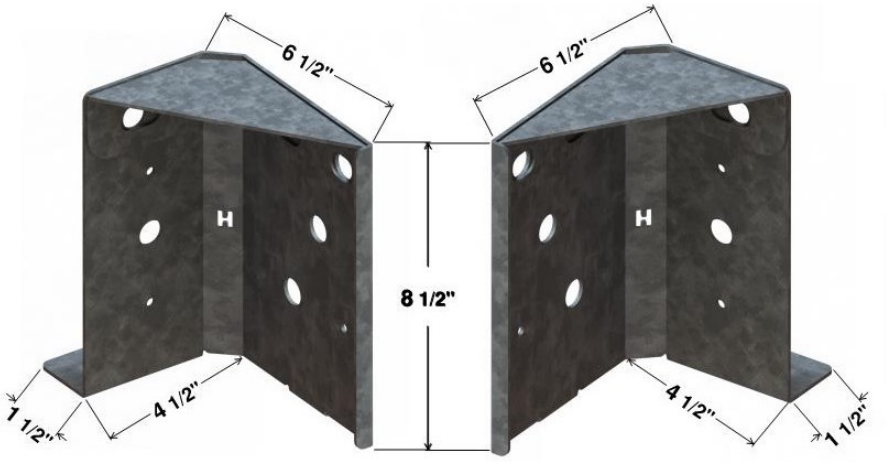

Deck Corner Ledger Brackets

Deck Corner Ledger Support Bracket with Gusset Plate (Left) and (Right)

(H2-GCL) *(H2-GCR)*

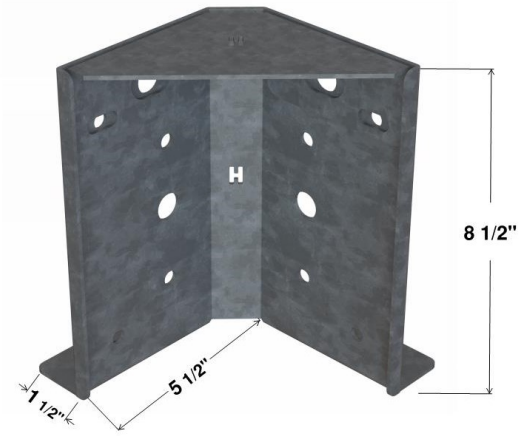

Deck Corner Beam Bracket

Deck Corner Beam Bracket

(H2-GCB)

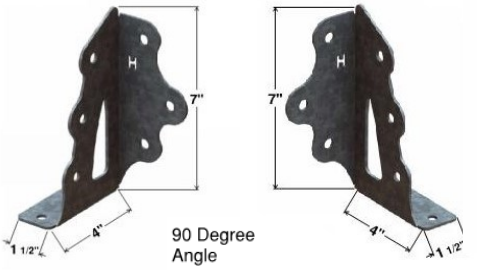

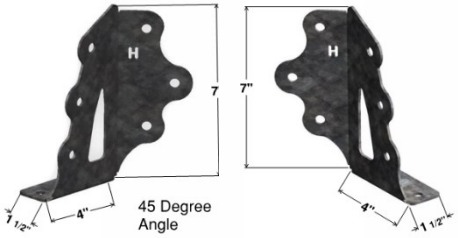

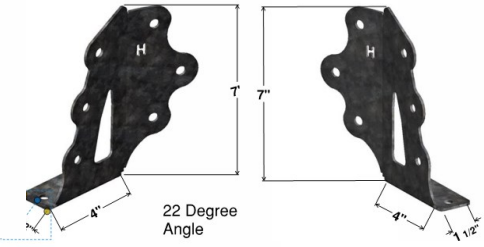

Deck Corner Hanger Brackets

Deck Corner Hanger Support Bracket

90 Degree (H2-GHL90) (H2-GHR90) ***45 Degree*** (H2-GHL45) (H2-GHR45) ***22 Degree*** (H2-GHL22) (H2-GHR22)

USPTO Patent # 10,024,046 Copyright © 2018-2021 HDG, Inc. - All Rights Reserved - Terms of Use @www.hdgep.com
209 Tidwell Dr. Alpharetta, GA 30004 | (770) 777-7007 | info@hdgep.com

HDG
ENGINEERED PRODUCTS

H2 SERIES: DECK CORNER BRACKETS

Description

- The H2 Series Deck Corner Brackets are made for all decks and attach to the deck ledger board to reinforce the outside rim joist and 4x4 or metal handrail post. Standard model comes with pictured gusset plate, but the deck ledger corner brackets are also available with TREX and FORTRESS top plate handrail mounts. Also available are corner brackets for cantilevered decks to reinforce beam and joist connections.
- The Corner Beam Bracket structurally reinforces the deck system at the interior corner where the deck ledger and outside rim joist connect, as well as providing a joist hanger for the outside rim joist(s).
- Note: The structural integrity of the deck is no longer counting on the nails of the joist hangers to securely attach it to the house.

Specifications

DETAILS	
Brand:	HDG, Inc.
Supports:	Post Size 6x6
Finish:	Hot Dipped Galvanized
	(Grey Industrial Finish for Corner Ledger & Corner Beam)
	(Black finish for Corner Hanger)
Rated:	For Treated Lumber
USPTO:	Bracket Bracing System - Patent Number US 10,024,046

DIMENSIONS		
Corner Ledger w/ Gusset	Length (L)	6 1/2"
	Width (W)	4 1/2"
	Height (H)	8 ½"
Deck Corner Beam	Length (L)	5 ½"
	Width (W)	1 ½"
	Height (H)	8 ½"
Corner Hanger	Length (L)	4"
	Width (W)	1 ½"
	Height (H)	7"

General Construction Notes

- **Check For Additional Requirements Per**
  - **Deck design professional AND local code authority**
- ***INSTALLER IS RESPONSIBLE FOR PREVENTING WATER INTRUSION:**
  - Tighten all bolts and caulks
- **Fasteners are to** be installed ONLY in provided, specified holes and **to meet or exceed local code.**
- **Additional Stair Versions Coming Soon.**

USPTO Patent # 10,024,046 Copyright © 2018-2021 HDG, Inc. - All Rights Reserved - Terms of Use @www.hdgep.com
209 Tidwell Dr. Alpharetta, GA 30004 | (770) 777-7007 | info@hdgep.com

H3 SERIES: DECK POST BRACKETS

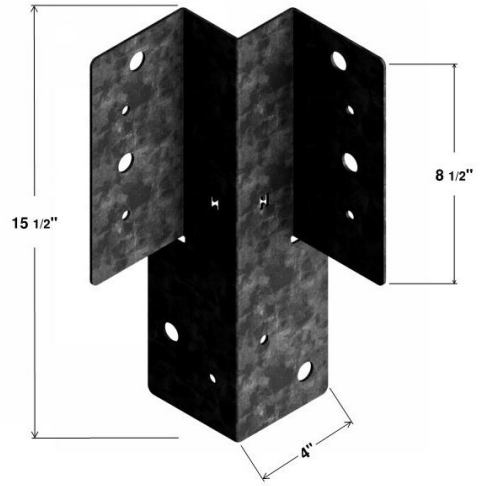

Single

Single Story Post Bracket
(H3-GPS)

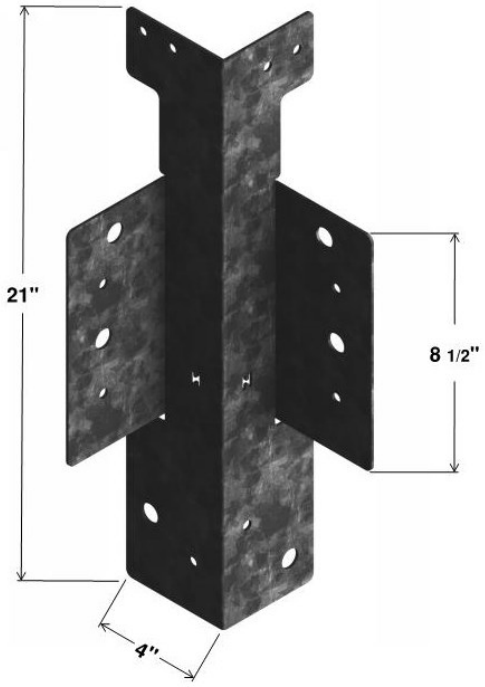

Multi

Multistory Post Bracket
(H3-GPM)

USPTO Patent # 10,024,046 Copyright © 2018-2021 HDG, Inc. - All Rights Reserved - Terms of Use @www.hdgep.com
209 Tidwell Dr. Alpharetta, GA 30004 | (770) 777-7007 | info@hdgep.com

HDG
ENGINEERED PRODUCTS

H3 SERIES: DECK POST BRACKETS

Description

- The Deck Post Bracket structurally reinforces the deck system at the exterior corner where the beam and deck outside rim joist rest on top of a 6x6 post. Additionally, it reinforces the integrity of the 4x4 handrail posts.
- Available for single and multistory decks:
  - The single-story bracket is also available with a TREX or Fortress top mount post for easy install of the TREX or Fortress handrail system
  - The multistory bracket reinforces and assists alignment of 6x6 post stacking, providing the code required continuous Load Path to the concrete footing

Specifications

DETAILS	
Brand:	HDG, Inc.
Supports:	Post Size 6x6
Finish:	Hot Dipped Galvanized (Black Industrial Coating)
Rated:	For Treated Lumber
USPTO:	Bracket Bracing System -
	Patent Number US 10,024,046

DIMENSIONS		
Single	Length (L)	8 ½"
	Width (W)	8"
	Height (H)	15 5/8"
MULTI	Length (L)	8 ½"
	Width (W)	8"
	Height (H)	20 7/8"

General Construction Notes

- **Check For Additional Requirements Per**
  - **Deck design professional AND local code authority**
- ***INSTALLER IS RESPONSIBLE FOR PREVENTING WATER INTRUSION:**
  - Tighten all bolts and caulks
- **Fasteners are t**o be installed ONLY in provided, specified holes and **to meet or exceed local code.**

USPTO Patent # 10,024,046 Copyright © 2018-2021 HDG, Inc. - All Rights Reserved - Terms of Use @www.hdgep.com
209 Tidwell Dr. Alpharetta, GA 30004 | (770) 777-7007 | info@hdgep.com

HDG
ENGINEERED PRODUCTS

H4 SERIES: PORCH ROOF TO POST BRACKETS

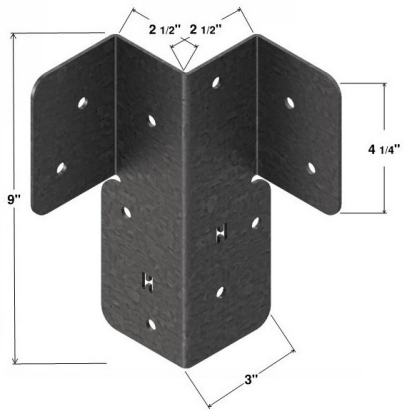

For 2x Framing

Porch Roof to Post Bracket for 2X Framing
(H4-GPR)

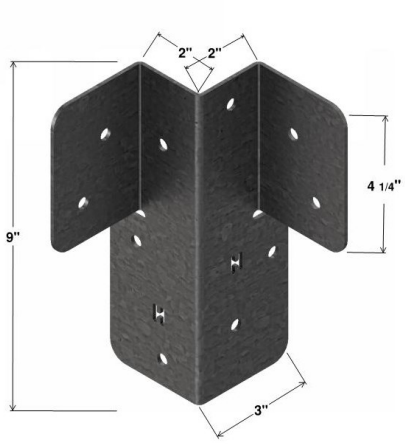

Double LVL

Porch Roof to Post Bracket for Double LVL
(H4-GPRV)

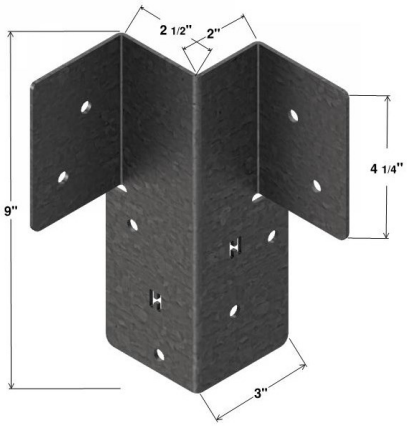

LVL Left

Porch Roof to Post Bracket for LVL Left
(H4-GPRL)

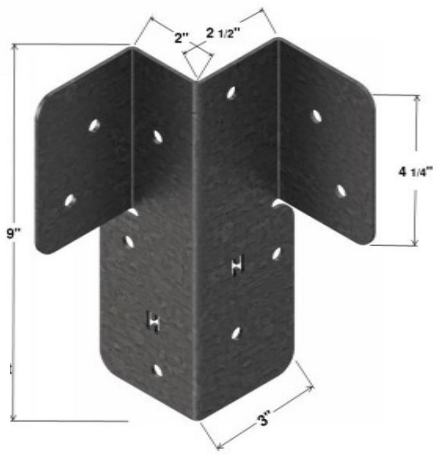

LVL Right

Porch Roof to Post Bracket for LVL Right
(H4-GPRR)

USPTO Patent # 10,024,046 Copyright © 2018-2021 HDG, Inc. - All Rights Reserved - Terms of Use @www.hdgep.com
209 Tidwell Dr. Alpharetta, GA 30004 | (770) 777-7007 | info@hdgep.com

HDG
ENGINEERED PRODUCTS

H4 SERIES: PORCH ROOF TO POST BRACKETS

Description

- The H4 Series Porch Roof to Post Brackets are a lighter duty version of the single-story deck brackets.
- Designed to securely fasten porch roof framing to the posts that support it, meeting or exceeding the code required continuous Load Path.
- Prevent slipping, twisting, or bending and are very easy to install, only requiring 10 screws each.
- Available for 2x framing and LVLs, or a combination thereof.

Specifications

DETAILS	
Brand:	HDG, Inc.
Variations:	For 2x Framing, Double LVL & Combo
Finish:	Hot Dipped Galvanized
	(Black Industrial Coating)
Thickness:	12 Gauge Steel
Rated:	For Treated Lumber
USPTO:	Bracket Bracing System -
	Patent Number US 10,024,046
Warranty	Limited (1) Year Manufacturer Warranty

DIMENSIONS		
For 2x Framing	Length (L)	4 1/4”
	Width (W)	3”
	Height (H)	9"
Double LVL	Length (L)	4 1/4”
	Width (W)	3”
	Height (H)	9"
LVL Left & Right	Length (L)	4 1/4”
	Width (W)	3”
	Height (H)	9"

General Construction Notes

- **Check For Additional Requirements Per**
  - **Deck design professional AND local code authority**
- ***INSTALLER IS RESPONSIBLE FOR PREVENTING WATER INTRUSION:**
  - Tighten all bolts and caulks

. **Fasteners are t**o be installed ONLY in provided, specified holes and **to meet or exceed local code.**

USPTO Patent # 10,024,046 Copyright © 2018-2021 HDG, Inc. - All Rights Reserved - Terms of Use @www.hdgep.com
209 Tidwell Dr. Alpharetta, GA 30004 | (770) 777-7007 | info@hdgep.com

HDG
ENGINEERED PRODUCTS

H5 SERIES: BEAM TO POST BRACKETS

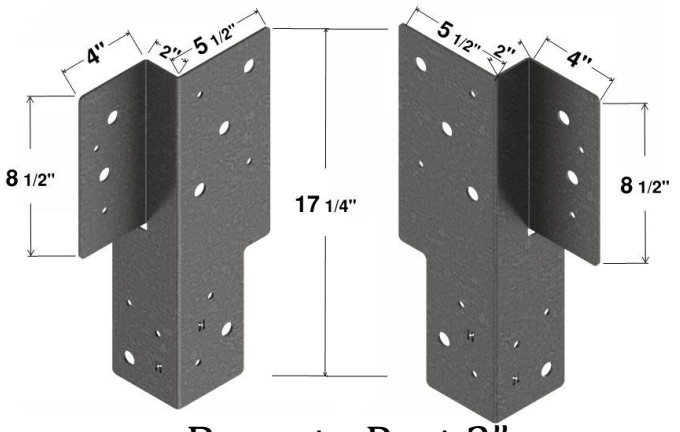

Beam to Post 2”

PSL Bracket Left & Right (3-Hole)
(H5-GBL3) (H5-GBR3)

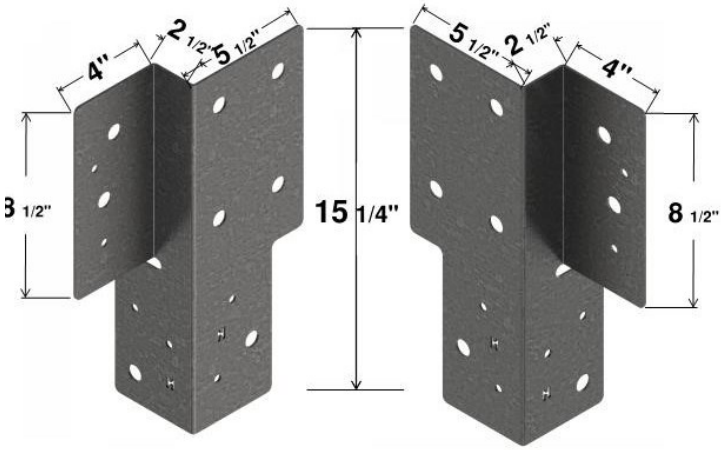

Beam Splice to Post 2 1/2”

PSL Splice Bracket Left & Right (4-Hole)
(H5-GBL4) (H5-GBR4)

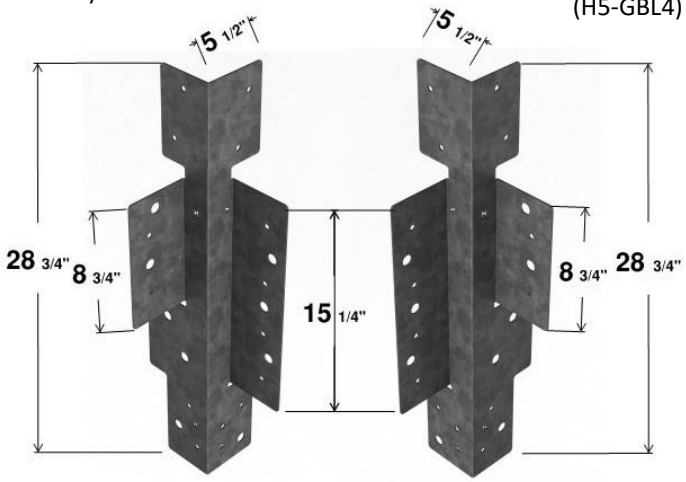

MHD Flush Beam

PSL Bracket Left & Right (5-Hole)
(H5-GBL5) (H5-GBR5)

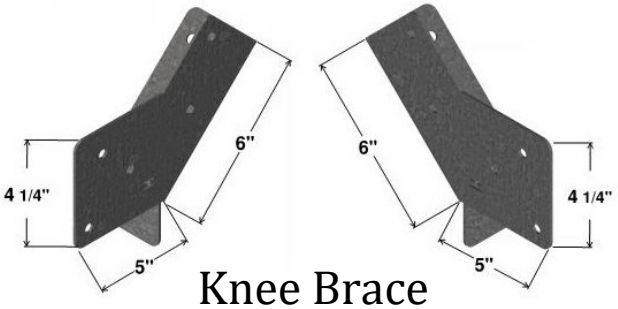

Knee Brace

Bracket (Left & Right)
(H5-GNL) (H5-GNR)

USPTO Patent # 10,024,046 Copyright © 2018-2021 HDG, Inc. - All Rights Reserved - Terms of Use @www.hdgep.com
209 Tidwell Dr. Alpharetta, GA 30004 | (770) 777-7007 | info@hdgep.com

HDG
ENGINEERED PRODUCTS

H5 SERIES: BEAM TO POST BRACKETS

Description

- **ALL Beam to Post Brackets:**
  - Connect & reinforce shaker (dropped) beam to post
  - Available in left, right configurations
- **Standard & Splice Beam to Post Brackets:**
  - Attaches deck post to shaker beam for overhung or extra-large decks
  - Heavy duty reinforcement reduces twisting
  - Available in Standard 2" offset for PSL and LVL or 2-1/2" offset for conventional 2x lumber configurations
- **Knee Brace Brackets:**
  - Reinforces the 4x4 or larger diagonal knee brace to a 4x4 or larger post

Specifications

DETAILS	
Brand:	HDG, Inc.
Supports:	Post Size 6x6
Finish:	Hot Dipped Galvanized
	(Black Industrial Coating)
Thickness:	12 Gauge Steel
Rated:	For Treated Lumber
USPTO:	Bracket Bracing System -
	Patent Number US 10,024,046
Warranty	Limited (1) Year Manufacturer Warranty

DIMENSIONS		
Standard	Length (L)	8 ½"
	Width (W)	5 ½"
	Height (H)	17 1/4"
Splice 2.5"	Length (L)	8 ½"
	Width (W)	5 ½"
	Height (H)	15 1/4"
PSL MHD	Length (L)	15 1/4"
	Width (W)	5 ½"
	Height (H)	28 3/4"
Knee Brace	Length (L)	8 3/8"
	Width (W)	3"
	Height (H)	8 ½"

General Construction Notes

- **Check For Additional Requirements Per**
  - **Deck design professional AND local code authority**
- ***INSTALLER IS RESPONSIBLE FOR PREVENTING WATER INTRUSION:**
  - Tighten all bolts and caulks
- **Fasteners are t**o be installed ONLY in provided, specified holes and **to meet or exceed local code.**

USPTO Patent # 10,024,046 Copyright © 2018 - 2021 HDG, Inc. - All Rights Reserved - Terms of Use @www.hdgep.com
209 Tidwell Dr. Alpharetta, GA 30004 | (770) 777-7007 | info@hdgep.com

H6 SERIES: POST BASES

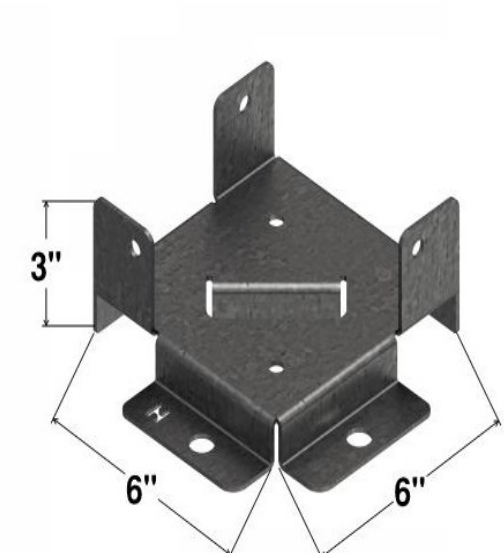

6x6

Post Base Bracket

(H6-GB6)

USPTO Patent # 10,024,046 Copyright © 2018 - 2021 HDG, Inc. - All Rights Reserved - Terms of Use @www.hdgep.com
209 Tidwell Dr. Alpharetta, GA 30004 | (770) 777-7007 | info@hdgep.com

HDG
ENGINEERED PRODUCTS

H6 SERIES: POST BASES

Description

- Made for all decks: attaches to the deck post base to reinforce the connection of the footing and post
- Post base designed to resist twisting and slipping
- Anchors to concrete with 2 ea. ½" anchor bolts
- Holds bottom of post off concrete (Maintains 1" space as required by code)
- Available for 4x4, 6x6, or 8x8 deck posts (6x6 in stock)

Specifications

DETAILS	
Brand:	HDG, Inc.
Supports:	Post Size 6x6
Finish:	Hot Dipped Galvanized
	(Black Industrial Coating)
Thickness:	12 Gauge Steel
Rated:	For Treated Lumber
USPTO:	Bracket Bracing System -
	Patent Number US 10,024,046
Warranty	Limited (1) Year Manufacturer Warranty

DIMENSIONS		
6x6	Length (L)	6 ¾"
	Width (W)	6 ¾"
	Height (H)	3"

General Construction Notes

- **Check For Additional Requirements Per**
  - **Deck design professional AND local code authority**
- ***INSTALLER IS RESPONSIBLE FOR PREVENTING WATER INTRUSION:**
  - Tighten all bolts and caulks
- **Fasteners are t**o be installed ONLY in provided, specified holes and **to meet or exceed local code.**
- **Additional sizes available in 3", 5", and 7" variations.**

USPTO Patent # 10,024,046 Copyright © 2018 - 2021 HDG, Inc. - All Rights Reserved - Terms of Use @www.hdgep.com
209 Tidwell Dr. Alpharetta, GA 30004 | (770) 777-7007 | info@hdgep.com

H7 SERIES: REINFORCEMENT BRACKETS

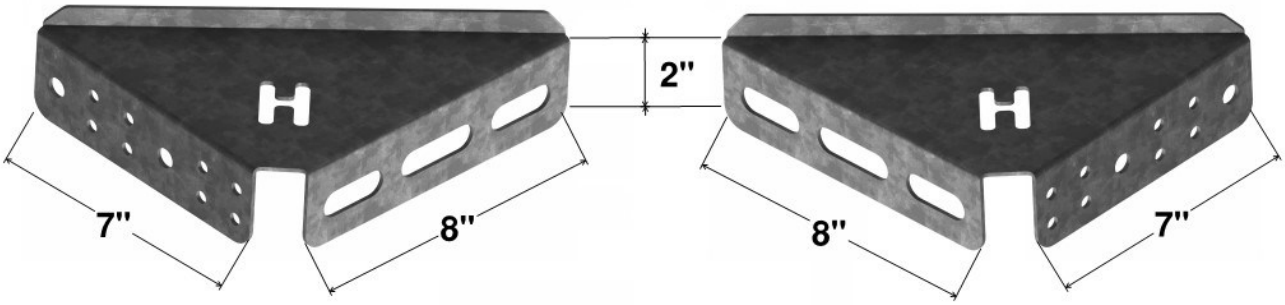

Deck Lateral Load Bracket

(H7-LLBL) (H7-LLBR)

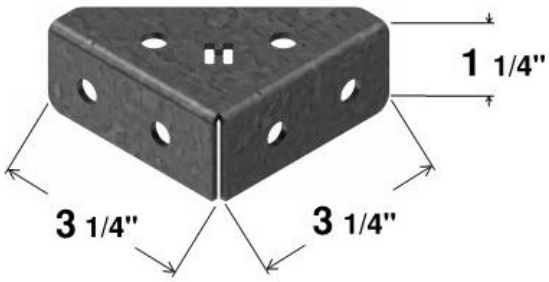

Mini Reinforcement Triangle Bracket

(H7-GM)

USPTO Patent # 10,024,046 Copyright © 2018 - 2021 HDG, Inc. - All Rights Reserved - Terms of Use @www.hdgep.com
209 Tidwell Dr. Alpharetta, GA 30004 | (770) 777-7007 | info@hdgep.com

HDG
ENGINEERED PRODUCTS

H7 SERIES: REINFORCEMENT BRACKETS

Description

All Reinforcement Brackets: Reinforce various deck construction features

Deck Lateral Load Bracket:

- Secures the deck to joist within the floor construction for structural integrity. Used in tandem with either a deck corner bracket or a deck ledger bracket
- Extra strength lateral deck retention to construction framing exceeds 1500 lbs.

Mini Reinforcement Triangle Bracket:

- Reinforces 4x4 to 2x4 using structural screws
- Also available as a multipurpose reinforcement bracket

Specifications

DETAILS	
Brand:	HDG, Inc.
Finish:	Hot Dipped Galvanized
	(Black Industrial Coating)
Thickness:	12 Gauge Steel
Rated:	For Treated Lumber
USPTO:	Bracket Bracing System -
	Patent Number US 10,024,046
Warranty	Limited (1) Year Manufacturer Warranty

DIMENSIONS		
LATERAL LOAD BRACKET	*Length (L)*	8"
	Width (W)	7"
	Height (H)	2”
MINI TRIANGLE	*Length (L)*	3 1/4"
	Width (W)	3 1/4"
	Height (H)	1 1/4”

General Construction Notes

- **Check For Additional Requirements Per**
  - **Deck design professional AND local code authority**
- ***INSTALLER IS RESPONSIBLE FOR PREVENTING WATER INTRUSION:**
  - Tighten all bolts and caulks
- **Fasteners are t**o be installed ONLY in provided, specified holes and **to meet or exceed local code.**

USPTO Patent # 10,024,046 Copyright © 2018 - 2021 HDG, Inc. - All Rights Reserved - Terms of Use @www.hdgep.com
209 Tidwell Dr. Alpharetta, GA 30004 | (770) 777-7007 | info@hdgep.com

SECTION 3

Assembly Guides

USPTO Patent # 10,024,046 Copyright © 2018 - 2021 HDG, Inc. - All Rights Reserved - Terms of Use @www.hdgep.com
209 Tidwell Dr. Alpharetta, GA 30004 | (770) 777-7007 | info@hdgep.com

HOUSEWRAP GUIDE

HDG
ENGINEERED PRODUCTS

STEP 1:

UNCOVERED OSB SHEATHING AT DECK LEDGER LOCATION – LEDGER NOT INSTALLED

STEP 2:

ZIP SYSTEM TAPE 4" OR EQUIVALENT IS PLACED FIRST TO ACT AS A SEPARATOR FOR SHINGLED HOUSE WRAP INSTALLATION

STEP 3:

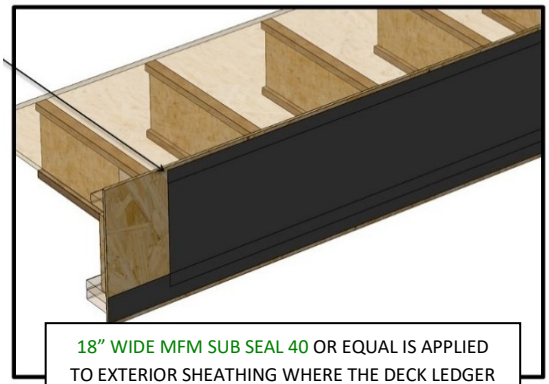

18" WIDE MFM SUB SEAL 40 OR EQUAL IS APPLIED TO EXTERIOR SHEATHING WHERE THE DECK LEDGER WILL BE INSTALLD, THE 4" ZIP SYSTEM TAPE

STEP 4:

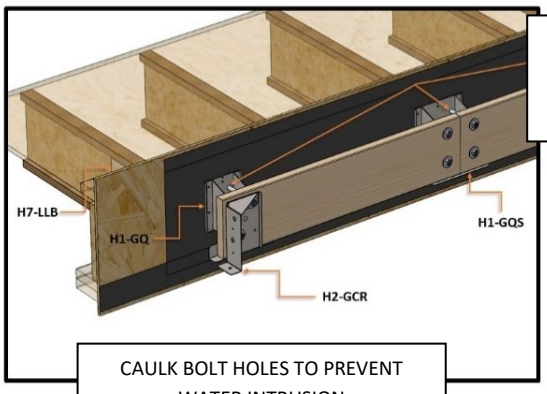

CAULK BOLT HOLES TO PREVENT WATER INTRUSION

DECK LEDGER MAY NOW BE INSTALLED, SEE THE HDGEP DECK LEDGER INSTALLATION GUIDE FOR DECKS ON BRICK OR INSTALL ON SIDING PER IRC 2018 CODE

STEP 5:

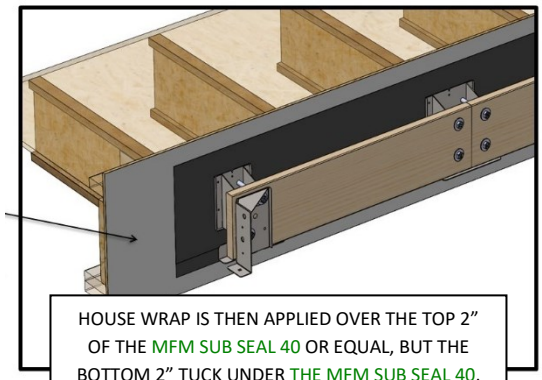

HOUSE WRAP IS THEN APPLIED OVER THE TOP 2" OF THE MFM SUB SEAL 40 OR EQUAL, BUT THE BOTTOM 2" TUCK UNDER THE MFM SUB SEAL 40, CREATING A SHINGLE EFFECT

STEP 6:

1) TAPE THE SEAMS STARTING AT THE BOTTOM, BEING SURE TO EXTEND THE TAPE 2" PASSED SEAM IN ALL DIRECTIONS.

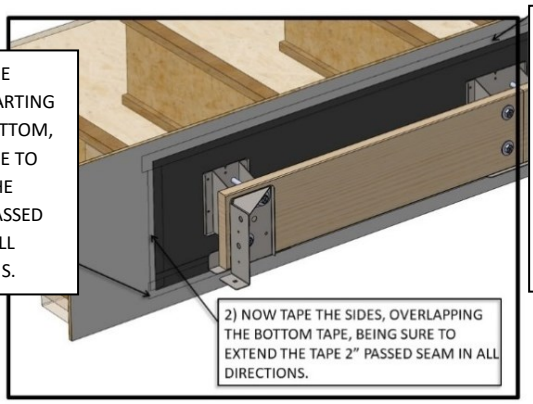

2) NOW TAPE THE SIDES, OVERLAPPING THE BOTTOM TAPE, BEING SURE TO EXTEND THE TAPE 2" PASSED SEAM IN ALL DIRECTIONS.

3) LASTLY, TAPE THE TOP, THIS METHOD ALLOWS FOR THE TAPE TO CREATE A SHINGLE EFFECT.

STEP 7:

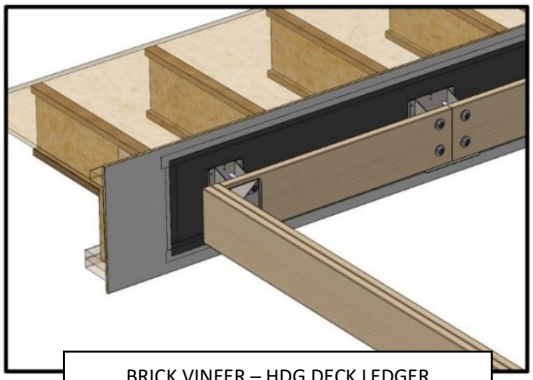

BRICK VINEER – HDG DECK LEDGER

USPTO Patent # 10,024,046 Copyright © 2018 - 2021 HDG, Inc. - All Rights Reserved - Terms of Use @www.hdgep.com
209 Tidwell Dr. Alpharetta, GA 30004 | (770) 777-7007 | info@hdgep.com

Series 1-2: Queen & Corner Brackets Assembly Guide

Structural Deck Support System: Product Numbers: H1-GQ, H2-GCL *(Also applies to H1-GK and H2-GCR)*

STEP 1: Following the spacing guidelines per the deck design and joist layout, mark the location of each H1-GQ Queen 4" Deck Ledger Support Bracket. Mark the level and height with a chalk line for where the top of H1-GQ bracket needs to sit in order to accommodate your deck floor height.

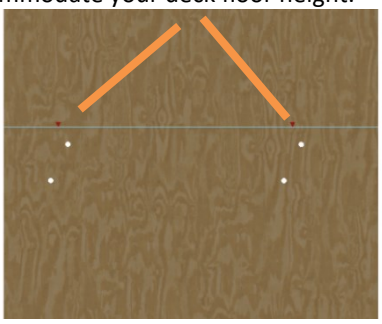

STEP 2: Line the divot in the H1-GQ back plate with the marks made along the chalk line.

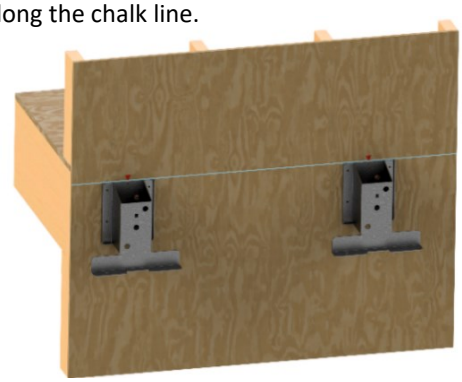

STEP 3: Fasten the H1-GQ bracket into position with 4 screws or nails.

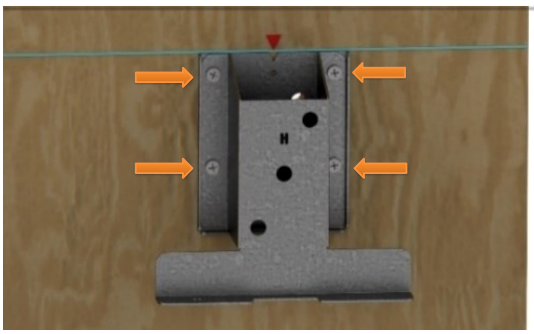

STEP 4: Drill from the front of bracket through the rim board. The bracket acts as a guide for straight, accurate holes. *Use* 5/8" bolts *(2 ea. for residential, 3 ea. for commercial)* and *12" long drill bit (recommended: Republic Tool Corp. #212 x 21/32")* https://www.mcmaster.com/#2464a18/=1ea711c

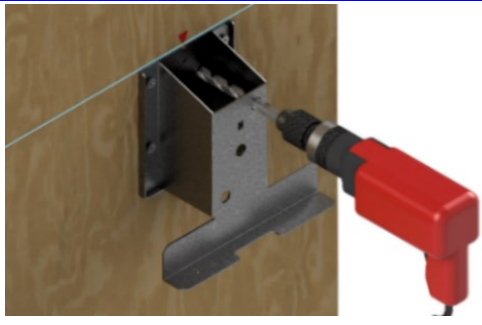

STEP 5: Bolt ledger board to brackets and wall, keeping the head of the bolt and washer inside the house. (Make sure adequate (1.5") space is left on end of ledger board from end of queen lip for appropriate installation of H2 corner series brackets and outer deck joist(s).

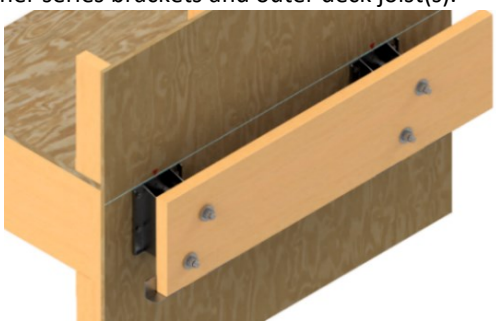

STEP 6: Caulk bolt hole within the bracket for protection from the elements.

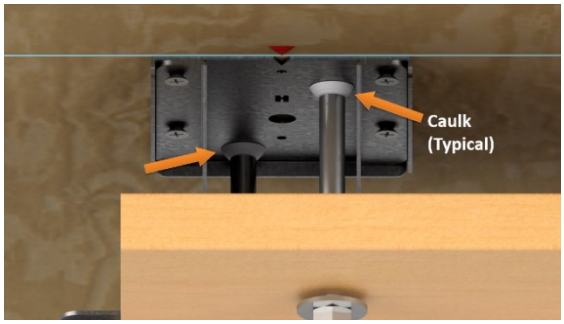

STEP 7: Attach the H2-GCL utilizing the bolts from the H1-GQ bracket.

STEP 8: Fasten vinyl weather barrier to wall and drape 1 inch over flashing.

(Continued on Back)

USPTO Patent # 10,024,046 Copyright © 2018 - 2021 HDG, Inc. - All Rights Reserved - Terms of Use @www.hdgep.com

209 Tidwell Dr. Alpharetta, GA 30004 | (770) 777-7007 | info@hdgep.com

Series 1-2: Queen & Corner Brackets Assembly Guide

STEP 9: Leaving a 1" air gap from wall, **brick up between ledger and wall, around brackets.**

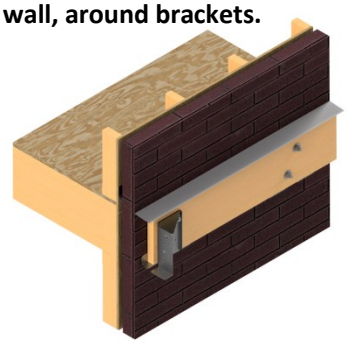

STEP 10: Illustrated side view for masonry detail.

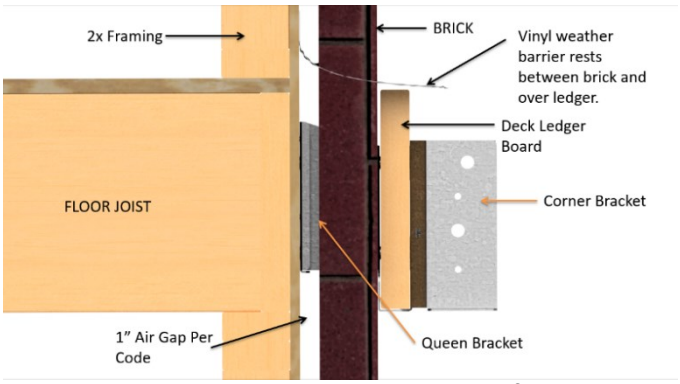

STEP 11: Attach the rim boards by normal fastening methods and temporarily secure the corner bracket with 2 screws or nails as shown.

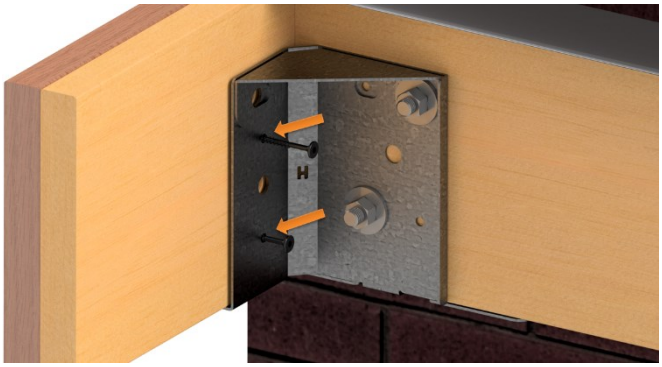

STEP 12: Fasten 4x4 handrail post with temporary toenailing or clamps. Drill through rim joist and 4x4 post allowing the corner bracket to act as guide.

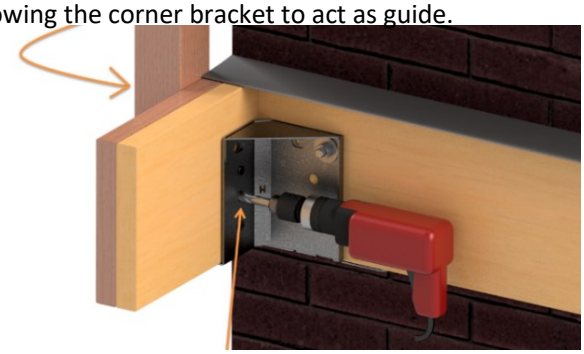

STEP 13: Bolt the rim joist assembly together with the heads of the bolt and washer to the 4x4 side.

STEP 14: Use 3" width galvanized flashing along the length of the ledger board.

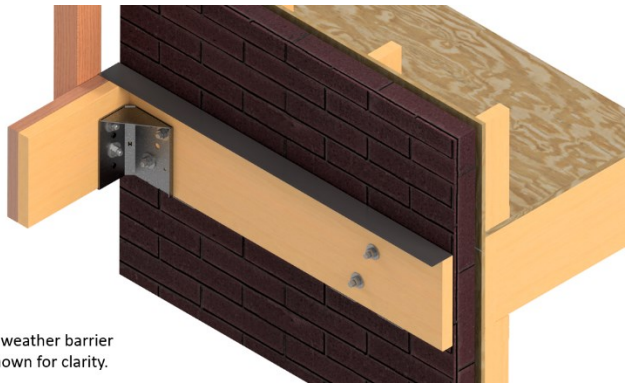

*Vinyl weather barrier not shown for clarity.

STEP 15: Illustrative view below to show how flashing is positioned under vinyl.

STEP 16: Installation Complete!

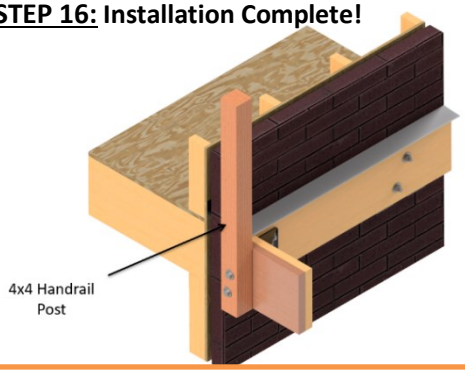

FOR ILLUSTRATED PURPOSES ONLY: SEE ADDITIONAL GUIDELINES PER DECK DESIGN PROFESSIONAL & LOCAL CODE AUTHORITY. INSTALLER IS RESPONSIBLE FOR PREVENTING WATER INTRUSION. TIGHTEN ALL BOLTS & SEAL ALL CAULK. FASTENERS MUST MEET OR EXCEED LOCAL CODE (REC: HDG ASTM 123 HOT DIPPED GALVANIZED OR STAINLESS STEEL) INSTALL ONLY IN PROVIDED, SPECIFIED HOLES. SEE HDGEP.COM FOR SPECS/VIDEOS

USPTO Patent # 10,024,046 Copyright © 2018 - 2021 HDG, Inc. - All Rights Reserved - Terms of Use @www.hdgep.com
209 Tidwell Dr. Alpharetta, GA 30004 | (770) 777-7007 | info@hdgep.com

Series 2: Corner Beam Bracket Assembly Guide

Structural Deck Support System: Product Numbers: H1-GQ, H2-GCL, & H2-GCR

STEP 1: Lay framing upon constructed beam and ledger. A cantilevered deck is used to display the function of this bracket. It can be used for similar purposes. In this case, we are using (2) 2x12's for beam and rim joist. Nail overlapped boards typically to hold them in place.

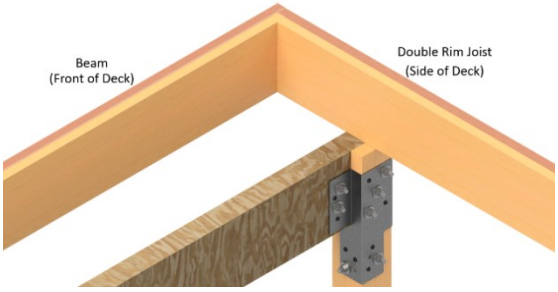

STEP 2: Place the H2-GCB bracket flush against corner, ensuring the bracket is flush along the bottom of the rim joist and beam (Optional: Can use screws or nails to temporarily hold in place).

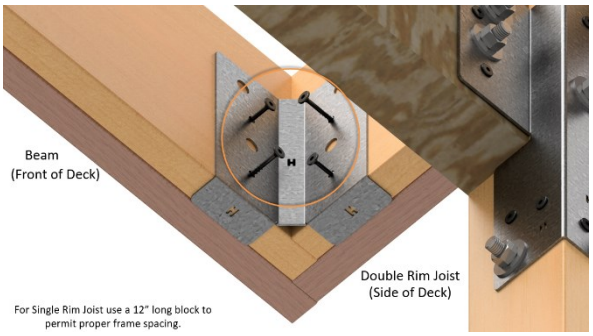

STEP 3: Cut 4x4 handrail posts and toenail or clamp them so that they align with the bolt holes on the bracket side flanges.

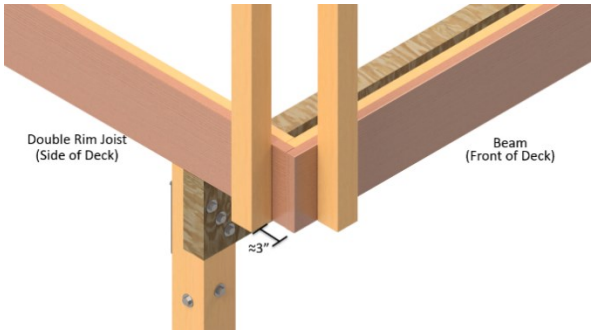

STEP 4: Drill, using each bolt hole in bracket as guides, through all lumber with a minimum ½" hole for ½" bolts or 5/8" hole for 5/8" bolts.

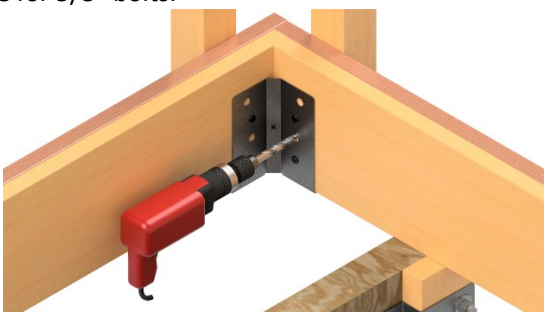

STEP 5: Installing bolts through the outside, fasten them inside the deck with code approved fasteners.

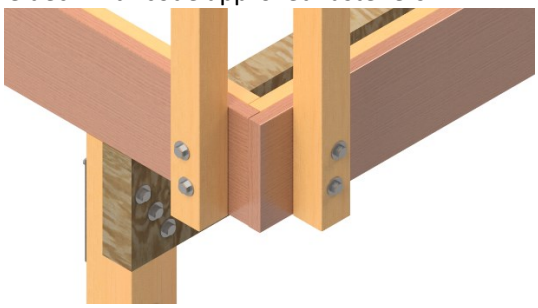

STEP 6: Torque per recommended wood council specs. Bolts are ½" diameter minimum. A307 bolts 5/8" thick should be torqued to 73 ft./lbs. A 307 bolts ½" thick should be torqued to 37 ft./lbs.

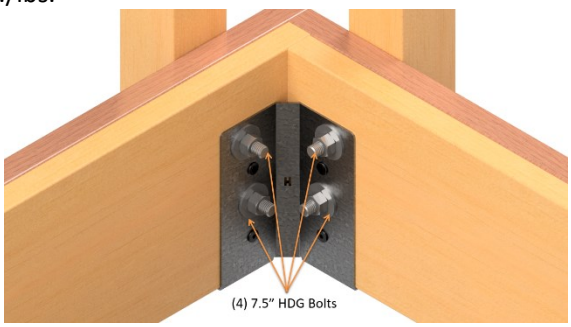

STEP 7: Installation Complete!

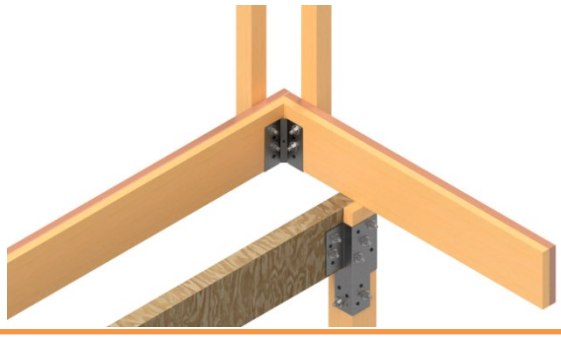

FOR ILLUSTRATED PURPOSES ONLY: SEE ADDITIONAL GUIDELINES PER DECK DESIGN PROFESSIONAL & LOCAL CODE AUTHORITY. INSTALLER IS RESPONSIBLE FOR PREVENTING WATER INTRUSION. TIGHTEN ALL BOLTS & SEAL ALL CAULK. FASTENERS MUST MEET OR EXCEED LOCAL CODE (REC: HDG ASTM 123 HOT DIPPED GALVANIZED OR STAINLESS STEEL) INSTALL ONLY IN PROVIDED, SPECIFIED HOLES. SEE HDGEP.COM FOR SPECS/VIDEOS

USPTO Patent # 10,024,046 Copyright © 2018 - 2021 HDG, Inc. - All Rights Reserved - Terms of Use @www.hdgep.com
209 Tidwell Dr. Alpharetta, GA 30004 | (770) 777-7007 | info@hdgep.com

Series 3: Single Story Deck Post Bracket Assembly Guide

Structural Deck Support System: Product Number: H3-GPS

STEP 1: **Notch the top of the deck post to accommodate the beam and rim joist used. In this case, we are using (2) 2x12's for beam and rim joist so the notch is approximately 11" long (L) and 3" deep (W) on 2 sides. (For 2x10's cut notch to 9")**

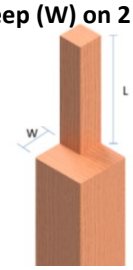

STEP 2: **Overlap the rim joist and beam as shown of using 2x lumber. Nail overlapped boards typically to hold them in place.**

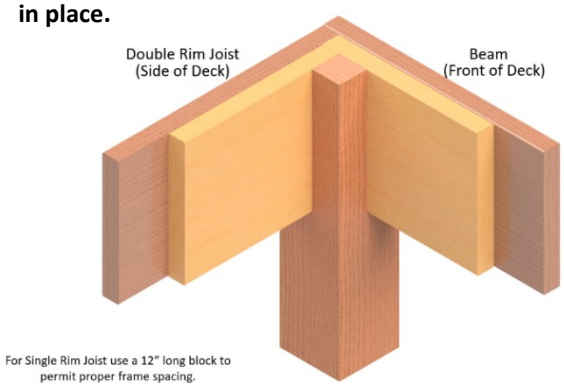

STEP 3: **Place the H3-GPS bracket flush against post, ensuring the bracket is flush along the bottom of the rim joist and beam. (Optional: Can use screws or nails to temporarily hold in place.)**

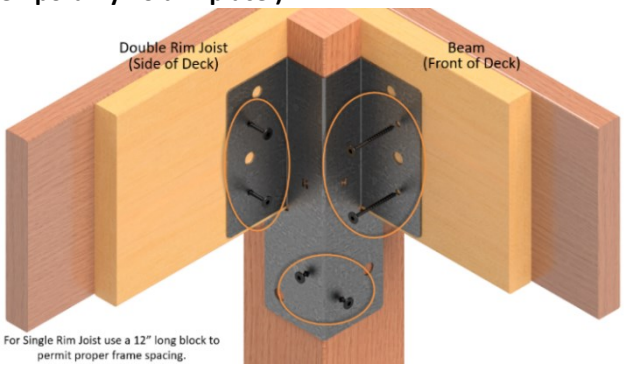

STEP 4: **Cut 4x4 handrail posts and toenail or clamp them so that they align with the bolt holes on the bracket side flanges.**

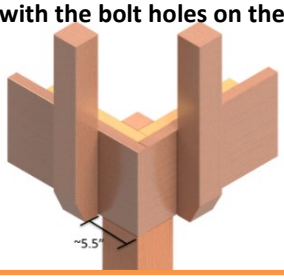

STEP 5: **Drill using each bolt hole in bracket as guides, through all lumber with a minimum ½" hole for ½" bolts.**

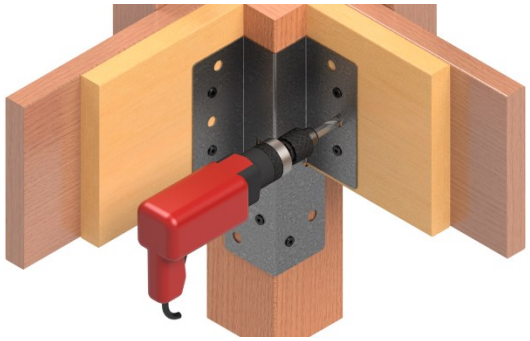

STEP 6: **Installing bolts through the outside, fasten them inside the deck with code approved fasteners. Torque per recommended wood council specs. Bolts are ½" diameter minimum.**

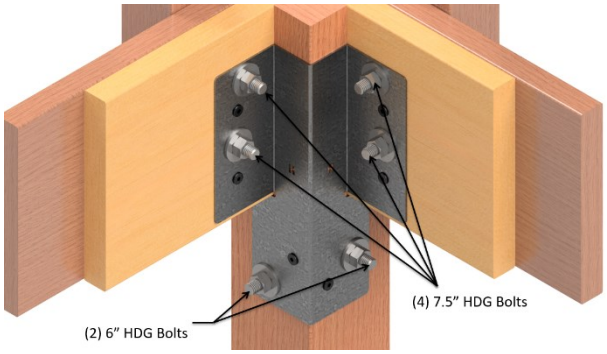

STEP 7: **Install 5/4 board decking flush across deck.**

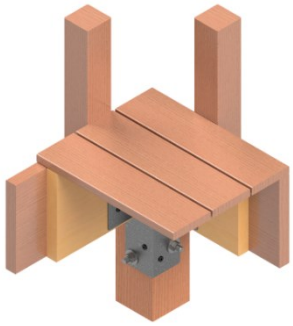

STEP 8: **2x4 knee bracing not required for decks with posts less than 11' high.** ***Installation Complete!***

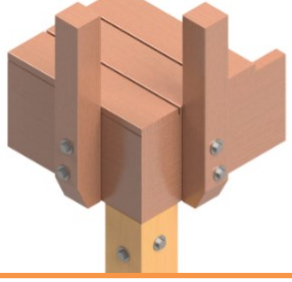

FOR ILLUSTRATED PURPOSES ONLY: SEE ADDITIONAL GUIDELINES PER DECK DESIGN PROFESSIONAL & LOCAL CODE AUTHORITY. INSTALLER IS RESPONSIBLE FOR PREVENTING WATER INTRUSION. TIGHTEN ALL BOLTS & SEAL ALL CAULK. FASTENERS MUST MEET OR EXCEED LOCAL CODE (REC: HDG ASTM 123 HOT DIPPED GALVANIZED OR STAINLESS STEEL) INSTALL ONLY IN PROVIDED, SPECIFIED HOLES. SEE HDGEP.COM FOR SPECS/VIDEOS

USPTO Patent # 10,024,046 Copyright © 2018 - 2021 HDG, Inc. - All Rights Reserved - Terms of Use @www.hdgep.com

209 Tidwell Dr. Alpharetta, GA 30004 | (770) 777-7007 | info@hdgep.com

Series 3: Multistory Deck Post Bracket Assembly Guide

Structural Deck Support System: Product Number: H3-GPM

STEP 1: **Notch the top of the deck post to accommodate the beam and rim joist used. In this case, we are using (2) 2x12's for beam and rim joist so the notch is 5 ½" long (L) (half the height of the beam) and 3" deep (W) on 2 sides.**

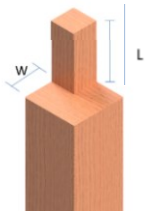

STEP 2: **Overlap the rim joist and beam as shown of using 2x lumber. Nail overlapped boards typically to hold them in place.**

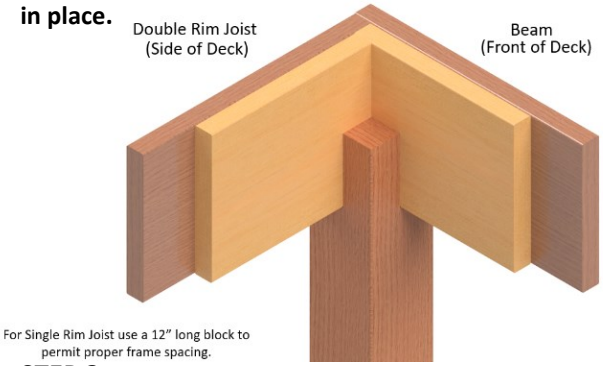

STEP 3: **Mount top post in orientation shown, allowing the notched end to fit. Toenail as necessary to temporarily hold post position in place.**

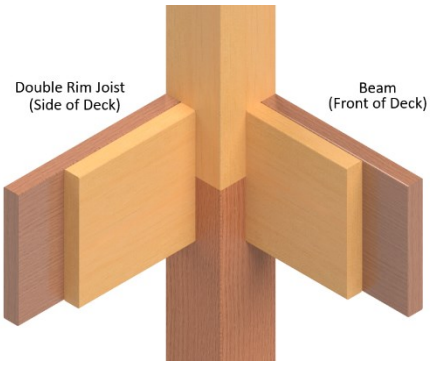

STEP 4: **Place the H3-GPM bracket flush against post, insuring the bracket is flush along the bottom of the rim joist and beam (Optional: Can use screws or nails to temporarily hold in place.)**

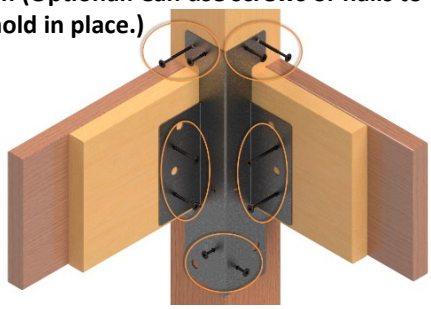

STEP 5: **Cut 4x4 handrail posts and toenail or clamp them so that they align with the bolt holes on the bracket side flanges.**

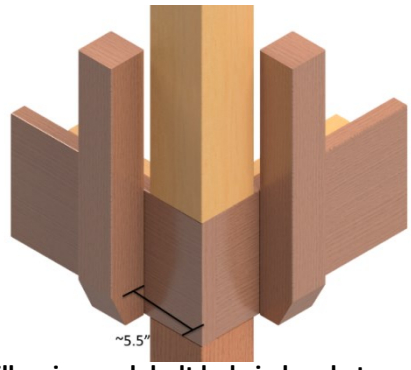

STEP 6: **Drill, using each bolt hole in bracket as guides, through all lumber with a minimum ½" hole for ½" bolts.**

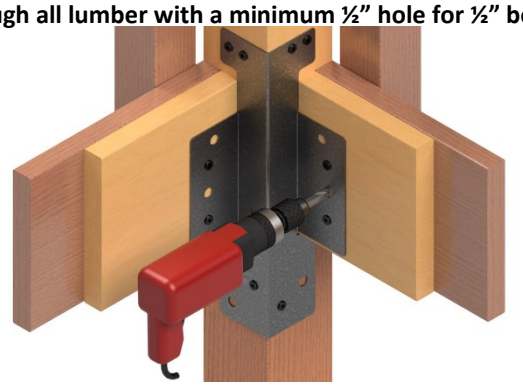

STEP 7: **Pushing bolts through from the outside, fasten them inside the deck with provided fasteners. Bolts are ½" diameter minimum.**

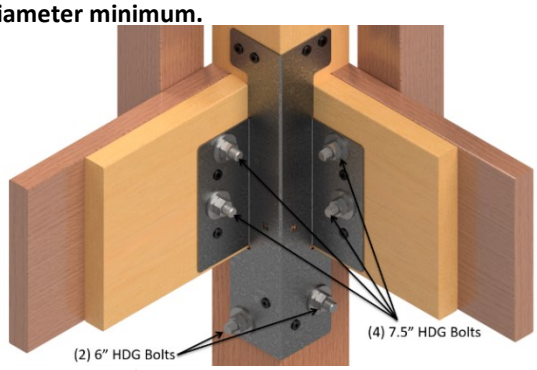

STEP 8: **Install 5/4 board decking flush across deck.**
Installation Complete!

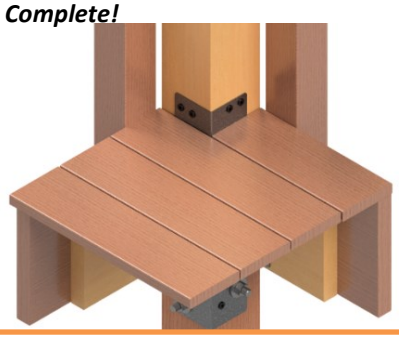

FOR ILLUSTRATED PURPOSES ONLY: SEE ADDITIONAL GUIDELINES PER DECK DESIGN PROFESSIONAL & LOCAL CODE AUTHORITY. INSTALLER IS RESPONSIBLE FOR PREVENTING WATER INTRUSION. TIGHTEN ALL BOLTS & SEAL ALL CAULK. FASTENERS MUST MEET OR EXCEED LOCAL CODE (REC: HDG ASTM 123 HOT DIPPED GALVANIZED OR STAINLESS STEEL) INSTALL ONLY IN PROVIDED, SPECIFIED HOLES. SEE HDGEP.COM FOR SPECS/VIDEOS

USPTO Patent # 10,024,046 Copyright © 2018 - 2021 HDG, Inc. - All Rights Reserved - Terms of Use @www.hdgep.com
209 Tidwell Dr. Alpharetta, GA 30004 | (770) 777-7007 | info@hdgep.com

Series 4: Porch Roof to Post Bracket Assembly Guide

Structural Deck Support System: Product Number: H4-GPR

STEP 1: Notch 6x6 post to accommodate beam and rim joist widths. For LVL's, width is 2.5". For 2X lumber, width is 4".

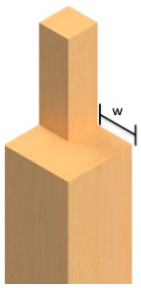

STEP 2: Nail frame typically. For this example, 2X material is used for beam and rim joist.

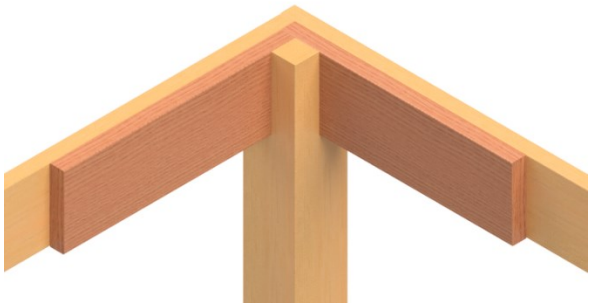

STEP 3: Use 10 screws to fasten the porch roof bracket to frame.

STEP 4: Finished view. *Installation Complete!*

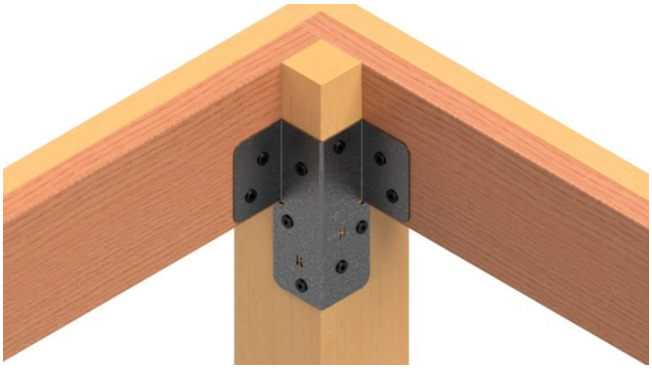

Cut view to illustrate use with other post brackets.

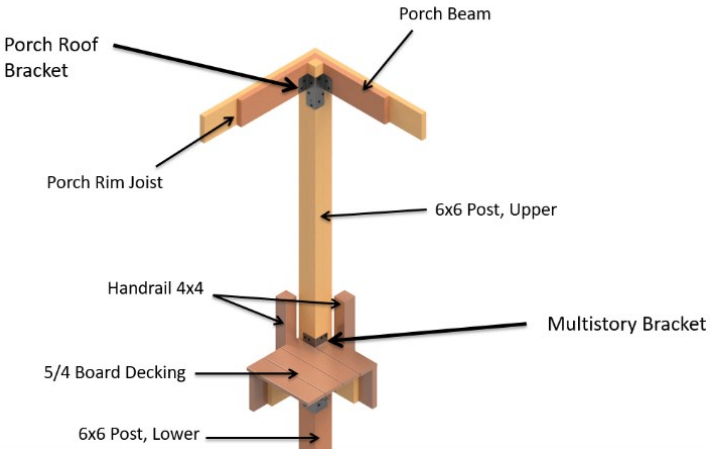

FOR ILLUSTRATED PURPOSES ONLY: SEE ADDITIONAL GUIDELINES PER DECK DESIGN PROFESSIONAL & LOCAL CODE AUTHORITY. INSTALLER IS RESPONSIBLE FOR PREVENTING WATER INTRUSION. TIGHTEN ALL BOLTS & SEAL ALL CAULK. FASTENERS MUST MEET OR EXCEED LOCAL CODE (REC: HDG ASTM 123 HOT DIPPED GALVANIZED OR STAINLESS STEEL) INSTALL ONLY IN PROVIDED, SPECIFIED HOLES. SEE HDGEP.COM FOR SPECS/VIDEOS

USPTO Patent # 10,024,046 Copyright © 2018 - 2021 HDG, Inc. - All Rights Reserved - Terms of Use @www.hdgep.com

209 Tidwell Dr. Alpharetta, GA 30004 | (770) 777-7007 | info@hdgep.com

Series 5: Beam to Post Bracket Assembly Guide

Structural Deck Support System: Product Numbers: H5-GBL3 (Also applies to H5-GBR3)

STEP 1: Notch the one end of each deck post to accommodate the beam used. In this case, we are using a 3 ½" x 12" LVL or PSL beam so the notch is 11.25" long (L) and 3" deep (W).

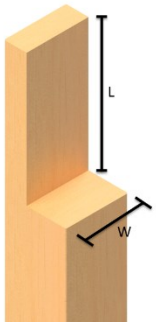

STEP 2: Set the beam across the posts as shown. Fasten overlapped boards temporarily to hold them in place.

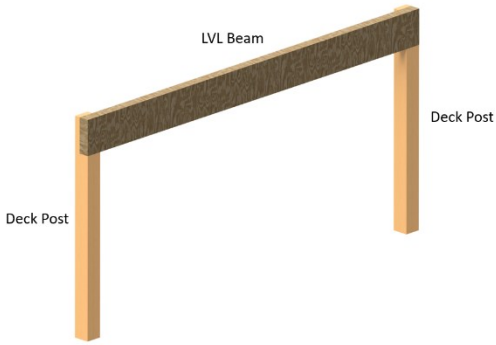

STEP 3: Place the H5-GBL3 bracket flush against post, ensuring the bracket is flush along the bottom of the beam (Optional: Can use screws or nails to temporarily hold in place).

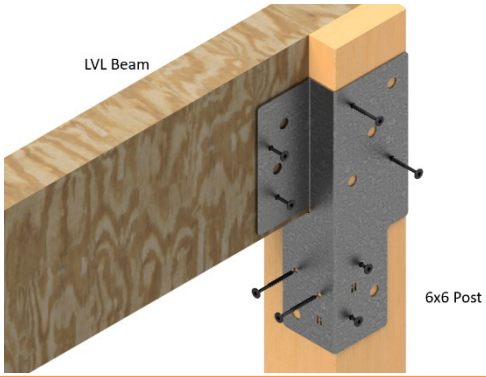

STEP 4: Drill, using each bolt hole in bracket as guides, through all lumber with a minimum ½" hole for ½" bolts or 5/8" hole for 5/8" bolts.

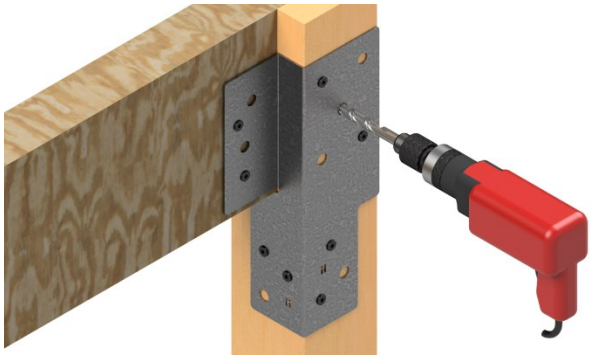

STEP 5: Pushing bolts through the outside, fasten them inside the deck with provided fasteners. Torque per recommended wood council specs. Bolts are ½" diameter minimum. *Installation Complete!*

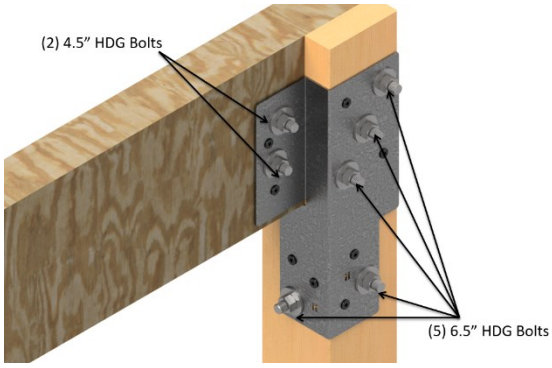

PSL Splice 2.5" Variation:

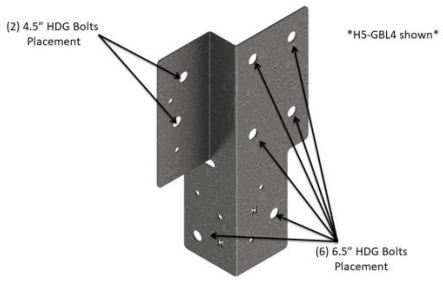

FOR ILLUSTRATED PURPOSES ONLY: SEE ADDITIONAL GUIDELINES PER DECK DESIGN PROFESSIONAL & LOCAL CODE AUTHORITY. INSTALLER IS RESPONSIBLE FOR PREVENTING WATER INTRUSION. TIGHTEN ALL BOLTS & SEAL ALL CAULK. FASTENERS MUST MEET OR EXCEED LOCAL CODE (REC: HDG ASTM 123 HOT DIPPED GALVANIZED OR STAINLESS STEEL) INSTALL ONLY IN PROVIDED, SPECIFIED HOLES. SEE HDGEP.COM FOR SPECS/VIDEOS

USPTO Patent # 10,024,046 Copyright © 2018 - 2021 HDG, Inc. - All Rights Reserved - Terms of Use @www.hdgep.com
209 Tidwell Dr. Alpharetta, GA 30004 | (770) 777-7007 | info@hdgep.com

Series 5: Knee Brace Bracket Assembly Guide

Structural Deck Support System: Product Number: H5-GNL *(Also applies to H5-GNR)*

STEP 1: Cut 4x4 or knee brace to length with 45-degree angle on end, as appropriate

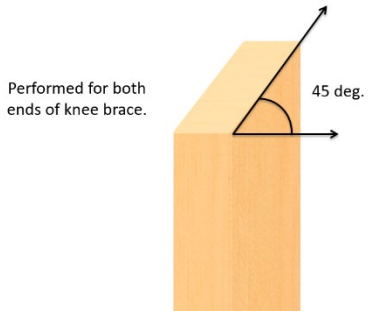

STEP 2: Place the knee brace into position on the frame. Toenail to hold its position for bracket installation.

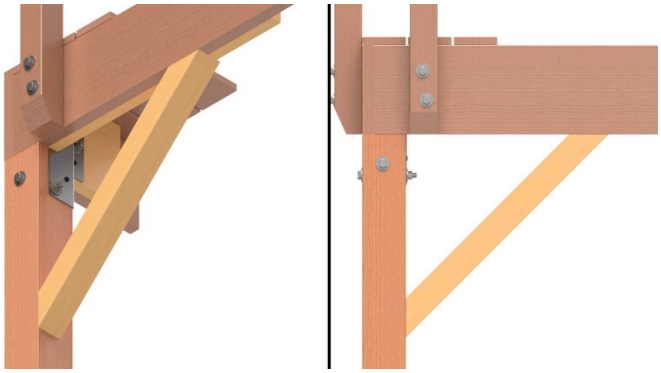

STEP 3: Use 10 screws per bracket to fasten the knee brace to frame.

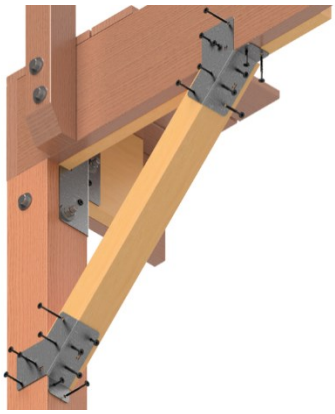

STEP 4: Use 10 screws per bracket to fasten the knee brace to frame.

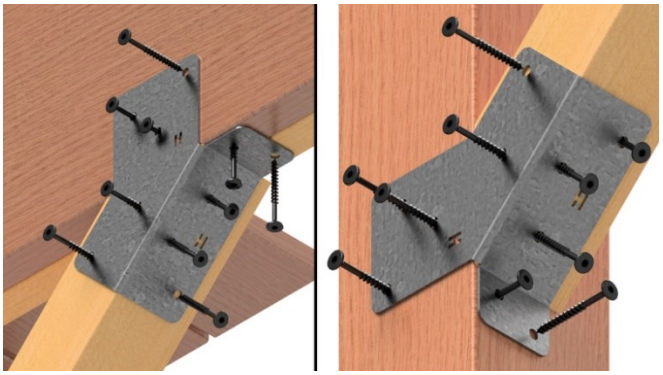

STEP 5: *Installation Complete!*

FOR ILLUSTRATED PURPOSES ONLY: SEE ADDITIONAL GUIDELINES PER DECK DESIGN PROFESSIONAL & LOCAL CODE AUTHORITY. INSTALLER IS RESPONSIBLE FOR PREVENTING WATER INTRUSION. TIGHTEN ALL BOLTS & SEAL ALL CAULK. FASTENERS MUST MEET OR EXCEED LOCAL CODE (REC: HDG ASTM 123 HOT DIPPED GALVANIZED OR STAINLESS STEEL) INSTALL ONLY IN PROVIDED, SPECIFIED HOLES. SEE HDGEP.COM FOR SPECS/VIDEOS

USPTO Patent # 10,024,046 Copyright © 2018 - 2021 HDG, Inc. - All Rights Reserved - Terms of Use @www.hdgep.com
209 Tidwell Dr. Alpharetta, GA 30004 | (770) 777-7007 | info@hdgep.com

Series 6: Post Base Assembly Guide

Structural Deck Support System: Product Number: H6-GB6

STEP 1: Attach post base bracket to 6x6 post using recommended screws.

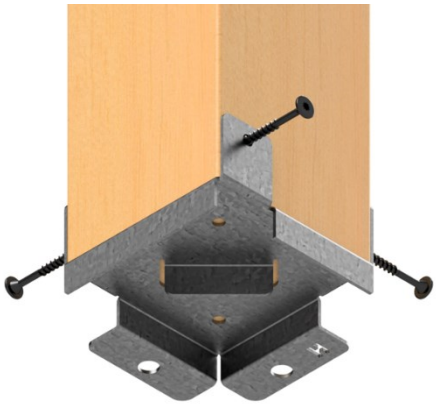

STEP 2: Position post centered over footing. Make sure bottom of bracket is flush with grade to allow 1" off grade code requirement.

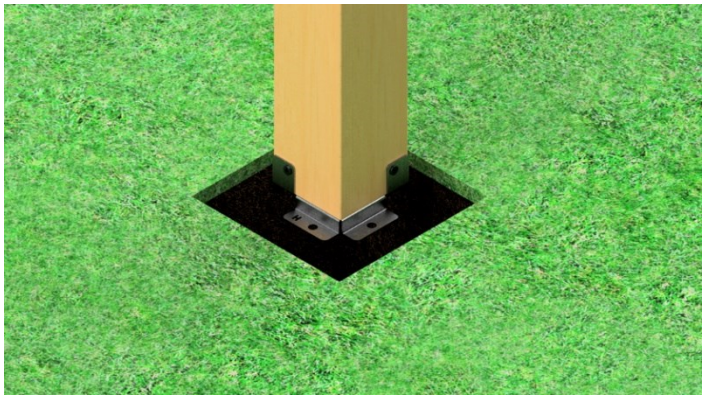

STEP 3: Place Anchor Bolts.

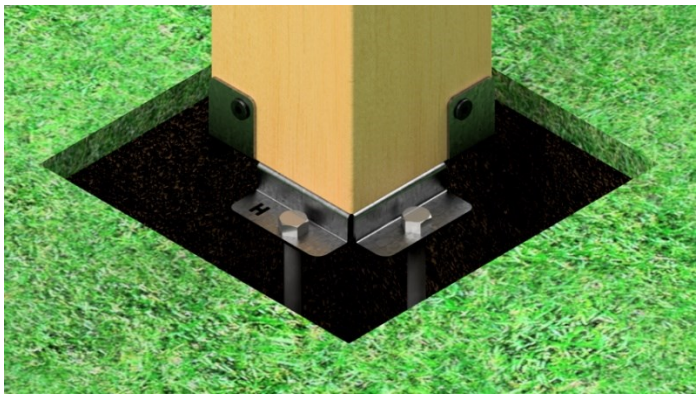

STEP 4: Fill footing with concrete.
Installation Complete!

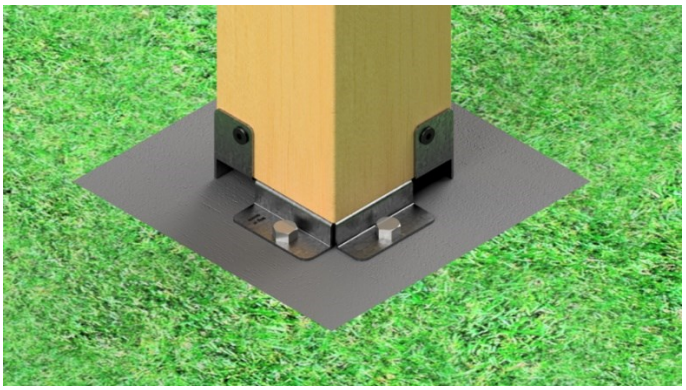

Cut view to illustrate use with other post brackets.

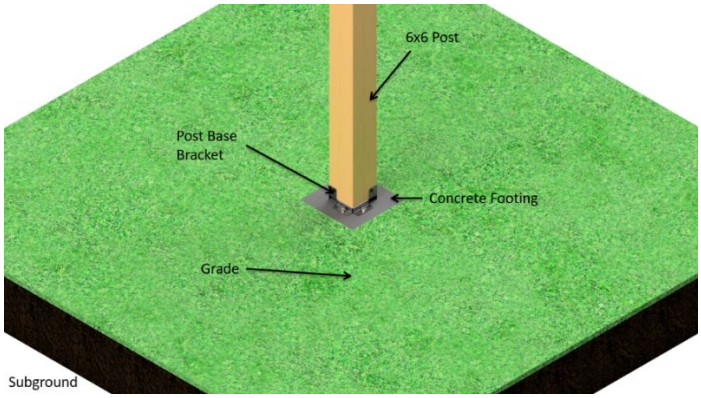

FOR ILLUSTRATED PURPOSES ONLY: SEE ADDITIONAL GUIDELINES PER DECK DESIGN PROFESSIONAL & LOCAL CODE AUTHORITY. INSTALLER IS RESPONSIBLE FOR PREVENTING WATER INTRUSION. TIGHTEN ALL BOLTS & SEAL ALL CAULK. FASTENERS MUST MEET OR EXCEED LOCAL CODE (REC: HDG ASTM 123 HOT DIPPED GALVANIZED OR STAINLESS STEEL) INSTALL ONLY IN PROVIDED, SPECIFIED HOLES. SEE HDGEP.COM FOR SPECS/VIDEOS

USPTO Patent # 10,024,046 Copyright © 2018 - 2021 HDG, Inc. - All Rights Reserved - Terms of Use @www.hdgep.com
209 Tidwell Dr. Alpharetta, GA 30004 | (770) 777-7007 | info@hdgep.com

Series 7: Reinforcement Bracket Assembly Guide

Structural Deck Support System: Product Number: H7-LLB

STEP 1: **Identify the H2 series bracket or ledger bolt you want to reinforce.**

STEP 2: **Position the deck lateral load bracket utilizing the available spaces within 2' of the end of the deck per 2018 IRC. Use the ledger bolt to fasten one into the inside of the rim joist.**

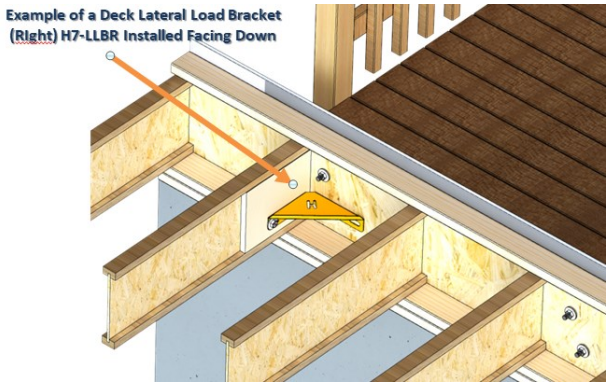

STEP 3: **Drill 2 additional holes for bolts in floor joist after reinforcing with ½" (min) plywood on each side or use 8 structural screws each.**

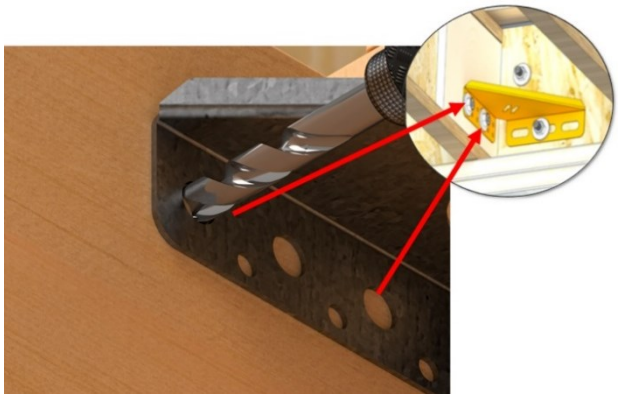

STEP 4: **Fasten 2 bolts per bracket minimum. Use ½" thread HDG steel bolts or use 8 structural screws each.**

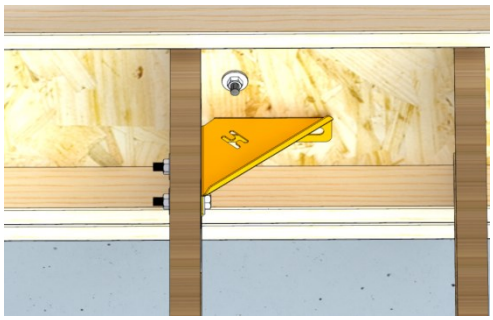

STEP 5: **Bottom view to illustrate use with other post brackets.** ***Installation Complete!***

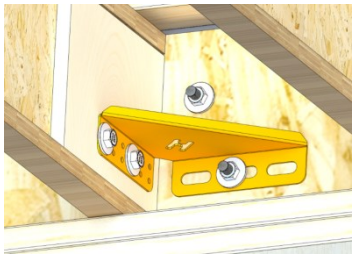

Top view with plywood subfloor removed to illustrate side bolts.

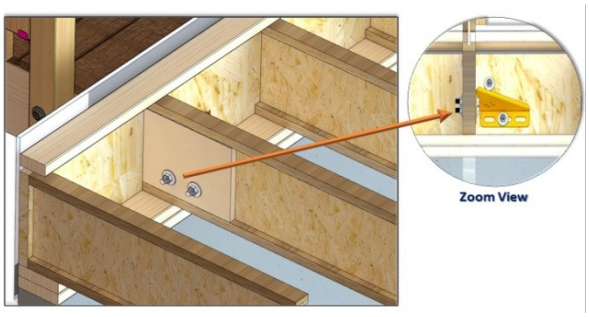

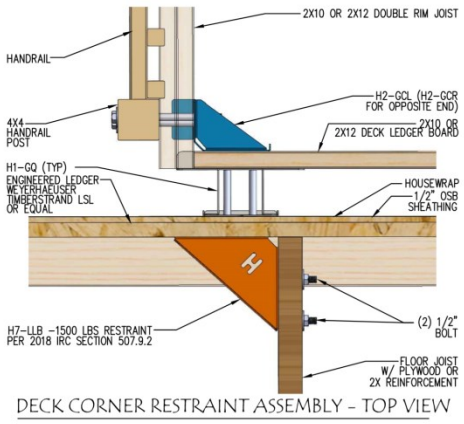

DECK CORNER RESTRAINT ASSEMBLY - TOP VIEW

FOR ILLUSTRATED PURPOSES ONLY: SEE ADDITIONAL GUIDELINES PER DECK DESIGN PROFESSIONAL & LOCAL CODE AUTHORITY. INSTALLER IS RESPONSIBLE FOR PREVENTING WATER INTRUSION. TIGHTEN ALL BOLTS & SEAL ALL CAULK. FASTENERS MUST MEET OR EXCEED LOCAL CODE (REC: HDG ASTM 123 HOT DIPPED GALVANIZED OR STAINLESS STEEL) INSTALL ONLY IN PROVIDED, SPECIFIED HOLES. SEE HDGEP.COM FOR SPECS/VIDEOS

USPTO Patent # 10,024,046 Copyright © 2018 - 2021 HDG, Inc. - All Rights Reserved - Terms of Use @www.hdgep.com
209 Tidwell Dr. Alpharetta, GA 30004 | (770) 777-7007 | info@hdgep.com.

SECTION 4

Photo Gallery, Order Form, & Retail Price List

USPTO Patent # 10,024,046 Copyright © 2018 - 2021 HDG, Inc. - All Rights Reserved - Terms of Use @www.hdgep.com
209 Tidwell Dr. Alpharetta, GA 30004 | (770) 777-7007 | info@hdgep.com

HDG

ENGINEERED PRODUCTS

FIELD INSTALLATION SERIES PHOTOS

H1 Series: Deck Ledger Support Brackets

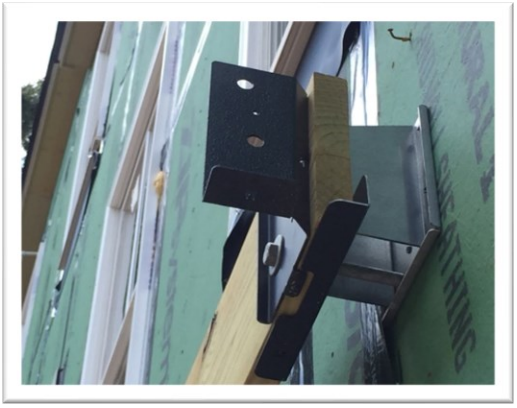

H2 Series: Deck Corner Brackets

H3 Series: Deck Post Brackets

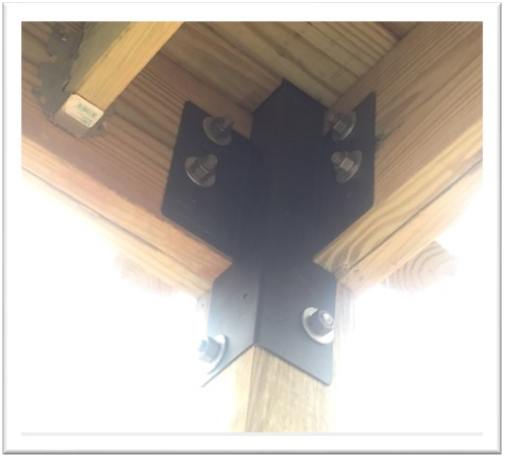

USPTO Patent # 10,024,046 Copyright © 2018 - 2021 HDG, Inc. - All Rights Reserved - Terms of Use @www.hdgep.com

209 Tidwell Dr. Alpharetta, GA 30004 | (770) 777-7007 | info@hdgep.com

H4 Series: Porch Roof/Post Brackets

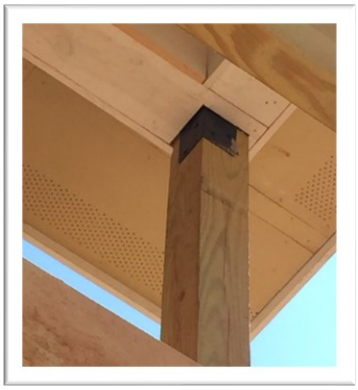

H5 Series: Beam to Post Brackets

H6 Series: Post Bases

H7 Series: Reinforcement Brackets

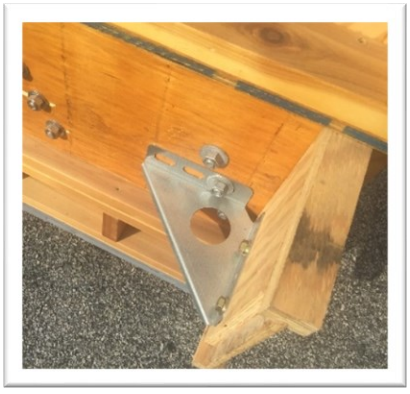

USPTO Patent # 10,024,046 Copyright © 2018 - 2021 HDG, Inc. - All Rights Reserved - Terms of Use @www.hdgep.com
209 Tidwell Dr. Alpharetta, GA 30004 | (770) 777-7007 | info@hdgep.com

FINAL FIELD PHOTOS GALLERY

USPTO Patent # 10,024,046 Copyright © 2018 - 2021 HDG, Inc. - All Rights Reserved - Terms of Use @www.hdgep.com
209 Tidwell Dr. Alpharetta, GA 30004 | (770) 777-7007 | info@hdgep.com

HDG, Inc. PRICE LIST - RETAIL
Date: 05/06/2021

HDG ENGINEERED PRODUCTS

209 Tidwell Drive
Alpharetta, GA 30004
(770) 777 - 7007
www.hdgep.com

Image	Price	Model #	Product Name
H1 Series: DECK LEDGER SUPPORT BRACKETS			
	$60.00	H1-GJ1	Deck Ledger Support Bracket (Junior - 1")
	$60.00	H1-GJ1S	Deck Ledger Support Bracket (Junior Splice - 1")
	$65.00	H1-GJ2	Deck Ledger Support Bracket (Jill - 2")
	$65.00	H1-GJ2S	Deck Ledger Support Bracket (Jill Splice - 2")
	$70.00	H1-GJ3	Deck Ledger Support Bracket (Jack - 3")
	$70.00	H1-GJ3S	Deck Ledger Support Bracket (Jack Splice - 3")
	$75.00	H1-GQ	Deck Ledger Support Bracket (Queen - 4")
	$75.00	H1-GQS	Deck Ledger Support Bracket (Queen Splice - 4")
	$75.00	H1-GK	Deck Ledger Support Bracket (King - 5")
	$75.00	H1-GKS	Deck Ledger Support Bracket (King Splice - 5")
H2 Series: DECK CORNER BRACKETS			
	$60.00	H2-GCL	Deck Corner Ledger Support Bracket with Gusset Plate
	$60.00	H2-GCR	Deck Corner Ledger Support Bracket with Gusset Plate
	$60.00	H2-GCB	Deck Corner Beam Bracket
	$30.00	H2-GHL90	Deck Corner Hanger Support Bracket (90 Degree - Left)
	$30.00	H2-GHR90	Deck Corner Hanger Support Bracket (90 Degree - Right)
	$30.00	H2-GHL45	Deck Corner Hanger Angled Support Bracket (45 Degree -
	$30.00	H2-GHR45	Deck Corner Hanger Angled Support Bracket (45 Degree -
	$30.00	H2-GHL22	Deck Corner Hanger Angled Support Bracket (22 Degree -
	$30.00	H2-GHR22	Deck Corner Hanger Angled Support Bracket (22 Degree -
	$30.00	H2-GCSL	Deck Corner Stair Support Bracket (Left)
	$30.00	H2-GCSR	Deck Corner Stair Support Bracket (Right)
H3 Series: DECK POST BRACKETS			
	$60.00	H3-GPS	Deck Post Bracket (Single Story)
	$60.00	H3-GPM	Deck Post Bracket (Multistory)
	$60.00	H3-GPSL	Deck Post Bracket (Single Story Special - Left)
	$60.00	H3-GPSR	Deck Post Bracket (Single Story Special - Right)
H4 Series: PORCH TO ROOF BRACKETS			
	$30.00	H4-GPR	Porch Roof to Post Bracket for 2X Framing
	$30.00	H4-GPRV	Porch Roof to Post Bracket for Double LVL
	$30.00	H4-GPRL	Porch Roof to Post Bracket for LVL (Left)
	$30.00	H4-GPRR	Porch Roof to Post Bracket for LVL (Right)

Image	Price	Model #	Product Name
H5 Series: BEAM TO POST BRACKETS			
	$60.00	H5-GBL3	PSL Beam to Post Bracket (2" - Left)
	$60.00	H5-GBR3	PSL Beam to Post Bracket (2" - Right)
	$60.00	H5-GBL4	Beam Splice to Post Bracket 2.5" (Left)
	$60.00	H5-GBR4	Beam Splice to Post Bracket 2.5" (Right)
	$75.00	H5-GBL5	PSL MHD Bracket (Left)
	$75.00	H5-GBR5	PSL MHD Bracket (Right)
	$30.00	H5-GNL	Knee Brace Bracket (Left)
	$30.00	H5-GNR	Knee Brace Bracket (Right)
H6 Series: POST BASE BRACKETS			
	$30.00	H6-GB6	Post Base Bracket (6" x 6")
	$35.00	H6-GB3	Post Base Bracket (High Strength - 3.5" X 7")
	$40.00	H6-GB5	Post Base Bracket (High Strength 5.25" X 5.25")
	$50.00	H6-GB7	Post Base Bracket (High Strength 7" X 7")
H7 Series: REINFORCEMENT BRACKETS			
	$25.00	H7-LLBL	Deck Lateral Load Bracket (Left) 'Permit Promo
	$25.00	H7-LLBR	Deck Lateral Load Bracket (Right) 'Permit Promo
	$10.00	H7-GM	Mini Reinforcement Triangle Bracket
QUICKPACK BOXES			
**	$300.00	H1-GQQ	Queen QuickPack *(4 Queens + Hardware)*
**	$150.00	H1-GQS	Queen Splice QuickPack *(2 Splices + Hardware)*
**	$170.00	H2-GCQ	Corner LLB QuickPack *(2 Corners + 2 LLBs)*
**	$120.00	H2-GMQ	Corner Mitek QuickPack *(2 Corners + 8 WS45 Mitek Screws)*
**	$120.00	H3-GSTQ	Twin Single QuickPack *(2 Singles)*
**	$180.00	H4-GMTQ	Twin Multi-Porch QuickPack (2 Multis + 2 Porch Roofs (FR)
**	$360.00	H5-G3Q	PSL 6x6 Post QuickPack (With Knee Braces 3-1/2 Beam (2"PSL = 1L, 1R; Crn Beams=2, Knee=2L,2R)
**	$240.00	H5-G3QB	PSL 8x8 Post QuickPack (No Knee Braces 5-1/4" Beam) (2"PSL = 1L, 1R; Crn Beams=2 +Lrgr Hrdwre)
**	$50.00	H7-LLQ	LLB QuickPack *(2 LLBs)*

**Note all Highlighted Items are items that are "full production"*

items - most frequently bought & popular for standard decks/porches

Copyright © 2018-21 HDG, Inc. - USPTO No. 10,024,046 - All Rights Reserved - Terms of Use Listed @ www.hdgep.com - Contact: info@hdgep.com

SAMPLE ORDER FORM

HDG
ENGINEERED PRODUCTS
01/01/20 www.hdgep.com *REFER TO SITE BEFORE INSTALL
And For Assemly Guides & Videos & Specifications

Order Fill Date:		*Delivery Date:*	
P.O.:		S.O.:	
Builder:			
Project Name:		Lot:	
Address:		Lot Info:	
Contact Name:		Phone Number:	
E-mail (Optional):		Deck Drawing Included: Yes ☐ No ☐	
Notes:			
Vendor Option:	*Home Type:*	*Deck Size:*	
Plan:	*Siding* ☐ *Brick* ☐	*Covered* ☐	*# Deck Stories:*
Notes:			

Packing Instructions		Product Totals		
Boxes Qty.	Select item(s) from dropdown menu below	**Item #**	**Model**	**Product Qty.**
	Select Item(s)	**H1-GQ**	4" Queen	
		H1-GQS	4" Queen Splice	
		H1-GK	5" King	
		H1-GKS	5" King Splice	
		H2-GCL	Corner Left	
		H2-GCR	Corner Right	
		H2-GCB	Corner Beam	
		H2-GCHL	Corner Hanger Left	
		H2-GCHR	Corner Hanger Right	
		H3-GPS	Single	
		H3-GPM	Multi	
		H4-GPR	2x Framing	
		H4-GPRV	Double Porch	
		H4-GPRL	LVL Left	
		H4-GPRR	LVL Right	
		H5-GBL3	PSL 2" Left	
		H5-GBR3	PSL 2" Right	
		H5-GBL4	Splice 2.5" Left	
		H5-GBR4	Splice 2.5" Right	
		H5-GBL5	PSL MHD Left	
		H5-GBR5	PSL MHD Right	
		H5-GNL	Knee Brace Left	
		H5-GNR	Knee Brace Right	
		H6-GB6	6x6 Post Base	
		H7-LLB	Lateral Load Bracket	
		H7-GM	Mini Triangle	

HARDWARE

4 1/2" Bolts:	12" Bolts:	2 7/8" Screws:
6 1/2" Bolts:	14" Bolts:	Ledger Lock Screws:
9" Bolts:	Nuts:	Tan Screws:
10" Bolts:	Washers:	
Notes:		

QUICK PACKS SUMMARY

Queen QP	Queen Splice QP	Single Post QP	Multi Post QP	Multi-Porch Post QP	PSL Beam Post QP		2020 LLB QP
Per Box:	**Per Box:**	**Per Box:**	**Per Box:**	**Per Box:**	**Per Box:**		**Per Box:**
(4) H1-GQ	(2) H1-GQS	(1) H2-GCL (1) H2-GCR	(1) H2-GCL (1) H2-GCR	(1) H2-GCL (1) H2-GCR	(1) H5-GBL3	(1) H5-GBR3	(2) H7-LLB
(8) 9" Bolts	(8) 9" Bolts	(2) H3-GPS	(2) H3-GPM	(2) H3-GPM (2) H4-GPR	(2) H5-GNL	(2) H5-GNR	(4) 2.5" Bolts
(8) Nuts	(8) Nuts	(4) 6.5" Bolts	(4) 6.5" Bolts	(4) 6.5" Bolts	(2) H2-GCB	(10) 6 1/2" Bolts	(4) Nuts
(16) Washers	(16) Washers	(4) Nuts	(4) Nuts	(4) Nuts	(4) 4 1/2" Bolts	(40) Screws	(8) Washers
		(8) Washers	(8) Washers (8) Screws	(8) Washers (28) Screws	(14) Nuts	(28) Washers	

Copyright © 2018 - 2020 HDG, Inc. - USPTO No. 10,024,046 - All Rights Reserved - Terms of Use Listed @ www.hdgep.com - Contact: info@hdgep.com

NTA® ICC INTERNATIONAL CODE COUNCIL®

TESTING • INSPECTION • ENGINEERING

TEST REPORT
for
ASTM D7147 Direct Vertical Load Capacity (Downward and Uplift) and Modified Lateral Capacity

Rendered to:

HDG, INC.

PRODUCT:

Deck Ledger Support Brackets

(Page 1, 6, 7 only)
Full report found at:
www.hdgep.com/ntareport

Report No.:	HDGI102218-13(R1)
Test Date(s):	11/07/2019 - 06/11/2020
Report Date:	09/03/2020
	40 pages

257 E Randolph St
Nappanee, IN 46550
Phone: 574-773-7975
www.icc-nta.org

USPTO Patent # 10,024,046 Copyright © 2018 - 2021 HDG, Inc. - All Rights Reserved - Terms of Use @www.hdgep.com
209 Tidwell Dr. Alpharetta, GA 30004 | (770) 777-7007 | info@hdgep.com

Queen Splice Upward (H1-GQS)

Specimen Number	Ultimate Load (lbf)	Ult. Per Bracket (lbf)	Time to Ultimate (sec)	Failure
115111	12,692	6346	408	Failure in wood substrates, no damage to brackets
115112	15,528	7,764	414	Failure in wood substrates, no damage to brackets
115113	15,350	7,675	396	Failure in wood substrates, no damage to brackets
Average:	14,523	7,262	406	--
Minimum:	12,692	6,346	396	--

Queen Downward (H1-GQ)

Specimen Number	Ultimate Load (lbf)	Ult. Per Bracket (lbf)	Time to Ultimate (sec)	Failure
114988	9,697	4,848	457	Failure in wood substrates, no damage to brackets
114989	8,535	4,268	379	Failure in wood substrates, no damage to brackets
114990	9,247	4,623	445	Failure in wood substrates, no damage to brackets
Average:	9,160	4,580	427	--
Minimum:	8,535	4,268	379	--

Queen Upward (H1-GQ)

Specimen Number	Ultimate Load (lbf)	Ult. Per Bracket (lbf)	Time to Ultimate (sec)	Failure
114996	8,213	4,106	531	Failure in wood substrates, no damage to brackets
114997	8,860	4,430	546	Failure in wood substrates, no damage to brackets
114998	8,453	4,227	538	Failure in wood substrates, no damage to brackets
Average:	8509	4254	538	--
Minimum:	8213	4106	531	--

Deck Corner Bracket Downward (H2-GCL & H2-GCR)

Specimen Number	Ultimate Load (lbf)	Ult. Per Bracket (lbf)	Time to Ultimate (sec)	Failure
115456	6,834	3,417	672	Failure in wood substrates, damage to holes on left and right bracket on header piece
115457	6,025	3,013	372	Failure in wood substrates
115458	5,439	2,720	367	Failure in wood substrates
Average:	6,099	3,050	471	--
Minimum:	5,439	2,720	367	--

(Page 1, 6, 7 only)
Full report found at:
www.hdgep.com/ntareport

USPTO Patent # 10,024,046 Copyright © 2018 - 2021 HDG, Inc. - All Rights Reserved - Terms of Use @www.hdgep.com
209 Tidwell Dr. Alpharetta, GA 30004 | (770) 777-7007 | info@hdgep.com

Deck Corner Bracket Upward (H2-GCL & H2-GCR)

Specimen Number	Ultimate Load (lbf)	Ult. Per Bracket (lbf)	Time to Ultimate (sec)	Failure
115348	6,178	3,089	323	Failure in wood substrates, bracing to corner bracket on right side is loose
115349	5,682	2,841	504	Failure in wood substrates, Bracket pulled through top of headers
115350	6,396	3,198	459	Failure in wood substrates, Bracket pulled through top of headers
Average:	6,086	3,043	429	--
Minimum:	5,682	2,841	323	--

3.5 Summary and Conclusions

ICC NTA, LLC was contracted by HDG, INC. to evaluate their *Deck Ledger Support* Brackets in accordance with ASTM D7147 to establish maximum ultimate loads in both the upward and downward direction. The load rating for each bracket can be seen below.

Conclusion

Bracket	Direction	Ultimate Load Rating per Bracket[a] (lbf)
4-in. Queen Splice (H1-GQS)	Downward	2,056
	Upward	2,115
4-in. Queen (H1-GQ)	Downward	1,422
	Upward	1,368
Deck Corner Bracket (H2-GCL and H2-GCR)	Downward	906
	Upward	947

[a] Load Rating was determined by dividing the minimum ultimate per bracket load (from each set of 3 specimens) by a safety factor of 3

USPTO Patent # 10,024,046 Copyright © 2018 - 2021 HDG, Inc. - All Rights Reserved - Terms of Use @www.hdgep.com
209 Tidwell Dr. Alpharetta, GA 30004 | (770) 777-7007 | info@hdgep.com

HDG, Inc. Retail PRICE
Date: 01/29/2021

HDG ENGINEERED PRODUCTS

209 Tidwell Drive
Alpharetta, GA 30004
(770) 777 - 7007
www.hdgep.com

Picture	Price	Model #	Name
H1 Series: DECK LEDGER SUPPORT BRACKETS			
	$75.00	H1-GQ	Queen Deck Ledger Support Bracket
	$75.00	H1-GQS	Queen Splice Deck Ledger Support Bracket
	$75.00	H1-GK	King Deck Ledger Support Bracket
	$75.00	H1-GKS	King Splice Deck Ledger Support Bracket
H2 Series: DECK CORNER BRACKETS			
	$50.00	H2-GCL	Deck Corner Ledger Support Bracket w/ Gusset Plate (Left)
	$50.00	H2-GCR	Deck Corner Ledger Support Bracket w/ Gusset Plate
	$50.00	H2-GCB	Deck Corner Beam Bracket
	$40.00	H2-GCHL	Deck Corner Hanger Bracket Left
	$40.00	H2-GCHR	Deck Corner Hanger Bracket Right
H3 Series: DECK POST BRACKETS			
	$55.00	H3-GPS	Single Story Deck Post Bracket
	$55.00	H3-GPM	Multistory Deck Post Bracket
H4 Series: PORCH TO ROOF BRACKETS			
	$30.00	H4-GPR	Porch Roof to Post Bracket for 2X Framing
	$30.00	H4-GPRV	Porch Roof to Post Bracket for Double LVL
	$30.00	H4-GPRL	Porch Roof to Post Bracket for LVL Left
	$30.00	H4-GPRR	Porch Roof to Post Bracket for LVL Right

Picture	Price	Model #	Name
H5 Series: BEAM TO POST BRACKETS			
	$50.00	H5-GBL3	Beam to Post Bracket 2" Left
	$50.00	H5-GBR3	Beam to Post Bracket 2" Right
	$50.00	H5-GBL4	Beam Splice to Post Bracket 2.5" Left
	$50.00	H5-GBR4	Beam Splice to Post Bracket 2.5" Right
	$75.00	H5-GBL5	PSL MHD Bracket Left
	$75.00	H5-GBR5	PSL MHD Bracket Right
	$30.00	H5-GNL	Knee Brace Bracket Left
	$30.00	H5-GNR	Knee Brace Bracket Right
H6 Series: POST BASE BRACKETS			
	$30.00	H6-GB6	6x6 Post Base Bracket
H7 Series: REINFORCEMENT BRACKETS			
	$25.00	H7-LLBL	Deck Lateral Load Bracket Left '20 Promo
	$25.00	H7-LLBR	Deck Lateral Load Bracket Right '20 Promo
	$10.00	H7-GM	Mini Reinforcement Triangle Bracket
QUICKPACK BOXES			
**	$300.00	H1-GQQ	Queen QuickPack *(4 Queens + Hardware)*
**	$150.00	H1-GQS	Queen Splice QuickPack *(2 Splices + Hardware)*
**	$110.00	H2-GCQ	Corner LLB QuickPack *(2 Corners + 2 LLBS)*
**	$110.00	H3-GSTQ	Twin Single QuickPack *(2 Singles)*
**	$170.00	H4-GMTQ	Twin Multi-Porch QuickPack (2 Multis + 2 Porch Roofs (FR)

USPTO Patent # 10,024,046 Copyright © 2018 - 2021 HDG, Inc. - All Rights Reserved - Terms of Use @www.hdgep.com
209 Tidwell Dr. Alpharetta, GA 30004 | (770) 777-7007 | info@hdgep.com

Copyright © 2021 HDG, Inc.
- All Rights Reserved –
Terms of Use Listed @www.hdgep.com

- *See additional guidelines per deck design professional and local code authority.*
- *Installer Is Responsible for Preventing Water Intrusion.*
    - *Tighten all bolts & seal all penetrations with caulk upon installation.*
- *Fasteners must meet or exceed local code (Recommended: HDG ASTM 123 Hot Dipped Galvanized or Stainless Steel for SS Brackets)*
    - *Install only in provided, specified holes.*
- *Assembly Guides For illustrated purposes only.*
    - *See hdgep.com for Assembly Guide Videos*

Copyright © 2021 HDG, Inc.
- All Rights Reserved –
Terms of Use Listed @www.hdgep.com

USPTO Patent # 10,024,046 Copyright © 2018 - 2021 HDG, Inc. - All Rights Reserved - Terms of Use @www.hdgep.com
209 Tidwell Dr. Alpharetta, GA 30004 | (770) 777-7007 | info@hdgep.com

HDG, Inc. PRICE LIST - RETAIL
Date: 05/06/2021

HDG ENGINEERED PRODUCTS

209 Tidwell Drive
Alpharetta, GA 30004
(770) 777 - 7007
www.hdgep.com

Image	Price	Model #	Product Name
H1 Series: DECK LEDGER SUPPORT BRACKETS			
	$60.00	H1-GJ1	Deck Ledger Support Bracket (Junior - 1")
	$60.00	H1-GJ1S	Deck Ledger Support Bracket (Junior Splice - 1")
	$65.00	H1-GJ2	Deck Ledger Support Bracket (Jill - 2")
	$65.00	H1-GJ2S	Deck Ledger Support Bracket (Jill Splice - 2")
	$70.00	H1-GJ3	Deck Ledger Support Bracket (Jack - 3")
	$70.00	H1-GJ3S	Deck Ledger Support Bracket (Jack Splice - 3")
	$75.00	H1-GQ	Deck Ledger Support Bracket (Queen - 4")
	$75.00	H1-GQS	Deck Ledger Support Bracket (Queen Splice - 4")
	$75.00	H1-GK	Deck Ledger Support Bracket (King - 5")
	$75.00	H1-GKS	Deck Ledger Support Bracket (King Splice - 5")
H2 Series: DECK CORNER BRACKETS			
	$60.00	H2-GCL	Deck Corner Ledger Support Bracket with Gusset Plate
	$60.00	H2-GCR	Deck Corner Ledger Support Bracket with Gusset Plate
	$60.00	H2-GCB	Deck Corner Beam Bracket
	$30.00	H2-GHL90	Deck Corner Hanger Support Bracket (90 Degree - Left)
	$30.00	H2-GHR90	Deck Corner Hanger Support Bracket (90 Degree - Right)
	$30.00	H2-GHL45	Deck Corner Hanger Angled Support Bracket (45 Degree -
	$30.00	H2-GHR45	Deck Corner Hanger Angled Support Bracket (45 Degree -
	$30.00	H2-GHL22	Deck Corner Hanger Angled Support Bracket (22 Degree -
	$30.00	H2-GHR22	Deck Corner Hanger Angled Support Bracket (22 Degree -
	$30.00	H2-GCSL	Deck Corner Stair Support Bracket (Left)
	$30.00	H2-GCSR	Deck Corner Stair Support Bracket (Right)
H3 Series: DECK POST BRACKETS			
	$60.00	H3-GPS	Deck Post Bracket (Single Story)
	$60.00	H3-GPM	Deck Post Bracket (Multistory)
	$60.00	H3-GPSL	Deck Post Bracket (Single Story Special - Left)
	$60.00	H3-GPSR	Deck Post Bracket (Single Story Special - Right)
H4 Series: PORCH TO ROOF BRACKETS			
	$30.00	H4-GPR	Porch Roof to Post Bracket for 2X Framing
	$30.00	H4-GPRV	Porch Roof to Post Bracket for Double LVL
	$30.00	H4-GPRL	Porch Roof to Post Bracket for LVL (Left)
	$30.00	H4-GPRR	Porch Roof to Post Bracket for LVL (Right)

Image	Price	Model #	Product Name
H5 Series: BEAM TO POST BRACKETS			
	$60.00	H5-GBL3	PSL Beam to Post Bracket (2" - Left)
	$60.00	H5-GBR3	PSL Beam to Post Bracket (2" - Right)
	$60.00	H5-GBL4	Beam Splice to Post Bracket 2.5" (Left)
	$60.00	H5-GBR4	Beam Splice to Post Bracket 2.5" (Right)
	$75.00	H5-GBL5	PSL MHD Bracket (Left)
	$75.00	H5-GBR5	PSL MHD Bracket (Right)
	$30.00	H5-GNL	Knee Brace Bracket (Left)
	$30.00	H5-GNR	Knee Brace Bracket (Right)
H6 Series: POST BASE BRACKETS			
	$30.00	H6-GB6	Post Base Bracket (6" x 6")
	$35.00	H6-GB3	Post Base Bracket (High Strength - 3.5" X 7")
	$40.00	H6-GB5	Post Base Bracket (High Strength 5.25" X 5.25")
	$50.00	H6-GB7	Post Base Bracket (High Strength 7" X 7")
H7 Series: REINFORCEMENT BRACKETS			
	$25.00	H7-LLBL	Deck Lateral Load Bracket (Left) 'Permit Promo
	$25.00	H7-LLBR	Deck Lateral Load Bracket (Right) 'Permit Promo
	$10.00	H7-GM	Mini Reinforcement Triangle Bracket
QUICKPACK BOXES			
**	$300.00	H1-GQQ	Queen QuickPack *(4 Queens + Hardware)*
**	$150.00	H1-GQS	Queen Splice QuickPack *(2 Splices + Hardware)*
**	$170.00	H2-GCQ	Corner LLB QuickPack *(2 Corners + 2 LLBs)*
**	$120.00	H2-GMQ	Corner Mitek QuickPack *(2 Corners + 8 WS45 Mitek Screws)*
**	$120.00	H3-GSTQ	Twin Single QuickPack *(2 Singles)*
**	$180.00	H4-GMTQ	Twin Multi-Porch QuickPack (2 Multis + 2 Porch Roofs (FR)
**	$360.00	H5-G3Q	PSL 6x6 Post QuickPack (With Knee Braces 3-1/2 Beam (2"PSL = 1L, 1R; Crn Beams=2, Knee=2L,2R)
**	$240.00	H5-G3QB	PSL 8x8 Post QuickPack (No Knee Braces 5-1/4" Beam) (2"PSL = 1L, 1R; Crn Beams=2 +Lrgr Hrdwre)
**	$50.00	H7-LLQ	LLB QuickPack *(2 LLBs)*

**Note all Highlighted Items are items that are "full production"*

items - most frequently bought & popular for standard decks/porches

Copyright © 2018-21 HDG, Inc. - USPTO No. 10,024,046 - All Rights Reserved - Terms of Use Listed @ www.hdgep.com - Contact: info@hdgep.com

National Association of Home Builders

HDG

ENGINEERED PRODUCTS

Proud Member of ... Greater Atlanta Home Builders Association

2019-2021 Atlanta Builder List

ASHTON WOODS

Bercher Homes — Great Homes, Great Life.

BROCK BUILT

BMC

Builders FirstSource

DECKED OUT CONSTRUCTION

DeckSource

D·R·HORTON America's Builder

EMPIRE

DECKSOUTH

KM HOMES

LENNAR

Leisure Time Designs, Inc.

MINERVA

MONTE HEWETT HOMES

THE PROVIDENCE GROUP

OutBack Deck, Inc. — life happens out back

PRECISION CONCRETE CONSTRUCTION, INC.

Toll Brothers — AMERICA'S LUXURY HOME BUILDER

SHARP RESIDENTIAL

taylor morrison — Homes Inspired by You

Veritas Homes — Your Only Way Home!

WATERFORD HOMES

Non-all-inclusive list. Various vendor agreements differ if any and list merely indicates engineered products have been purchased/installed from HDG, Inc. All copyrights and trademarks reserved to each individual builder © 2018 - 2021

USPTO Patent # 10,024,046 Copyright © 2018 - 2021 HDG, Inc. - All Rights Reserved - Terms of Use @www.hdgep.com

209 Tidwell Dr. Alpharetta, GA 30004 | (770) 777-7007 | info@hdgep.com